REV	DESCRIPTION	DRAWN	DATE
		APPROVED	DATE
A	1.50 WAS 2.19	K.CRAMPTON	16-JUL-2010

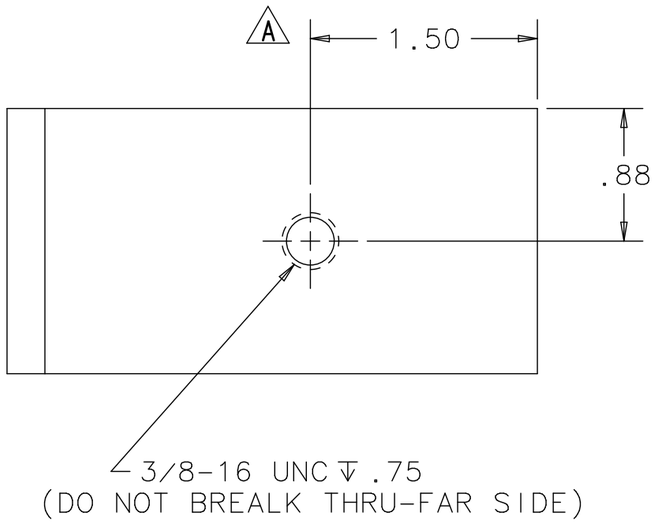

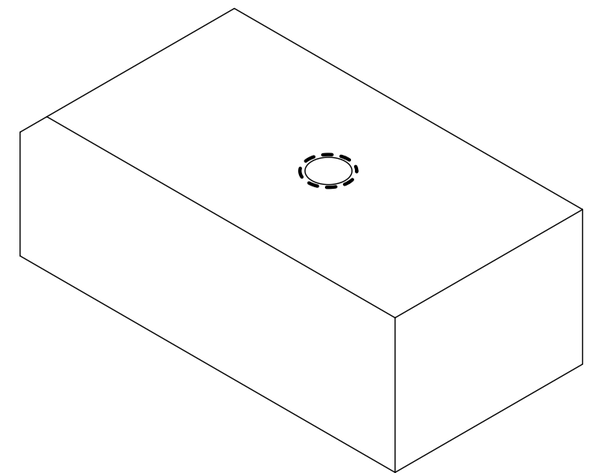

ISOMETRIC VIEW

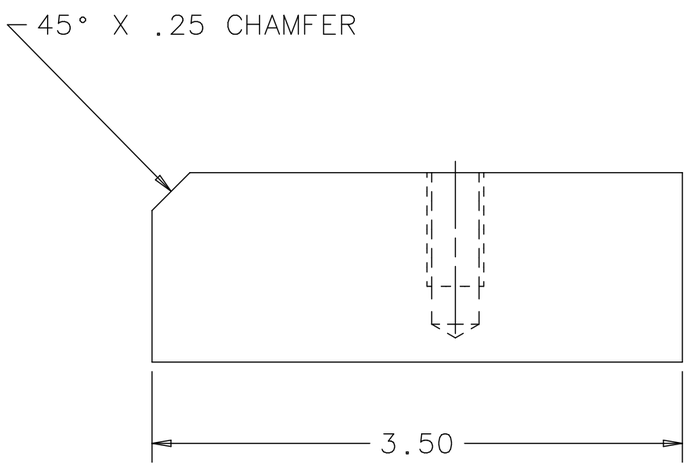

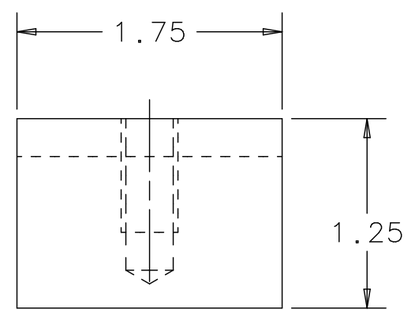

WEIGHT = 2 LBS

UNLESS OTHERWISE SPECIFIED			ORIGINATOR	A.STEFANIK	01-JUN-2010
.XX	.XXX	ANGLES	DRAWN	V.MAJDANSKI	01-JUN-2010
± .02	± ---	± ---	CHECKED	G.SMITH	12-JUL-2010
			APPROVED	A.STEFANIK	9-JUL-2010

1. BREAK ALL SHARP EDGES .015 MAX.
2. DO NOT SCALE DRAWING.
3. DIMENSIONS BASED UPON ASME Y14.5M-1994
4. MAX. ALL MACH. SURFACES 125
5. DRAWING UNITS: U.S. INCH

USED ON: ME-480355

MATERIAL: ASTM-A36 STEEL

FERMI NATIONAL ACCELERATOR LABORATORY
UNITED STATES DEPARTMENT OF ENERGY

NOTICE: IMAGE OBTAINED FROM FERMILAB WEB SITE

This information is provided for REFERENCE use only. Not for MANUFACTURE, or DESIGN INFORMATION. All information contained in this document represents work sponsored by an agency of the U.S. Government. Neither the U.S. Government nor any agency thereof, nor Universities Research Association, Inc., nor any of their employees or officers, makes any warranty, express or implied, or assumes any legal liability or responsibility for the accuracy, completeness, or usefulness of any information, apparatus, product or process disclosed, or represents that its use would not infringe privately owned rights.

DECAM/CORRECTOR AND CAGE
CAGE
PF CAGE CWT LIFTING LUG

SCALE	DRAWING NUMBER	SHEET	REV
1:1	4900.123-MB-480418	1 OF 1	A

CREATED WITH : Ideas12NXSeries | GROUP: PPD/MECHANICAL DEPARTMENT