REV	DESCRIPTION	DRAWN	DATE
		APPROVED	DATE
A	MAT'L WAS ASTM A-36 STEEL	J.RAUCH	04-AUG-2010
	WEIGHT WAS 77 LBS	A.STEFANIK	04-AUG-2010

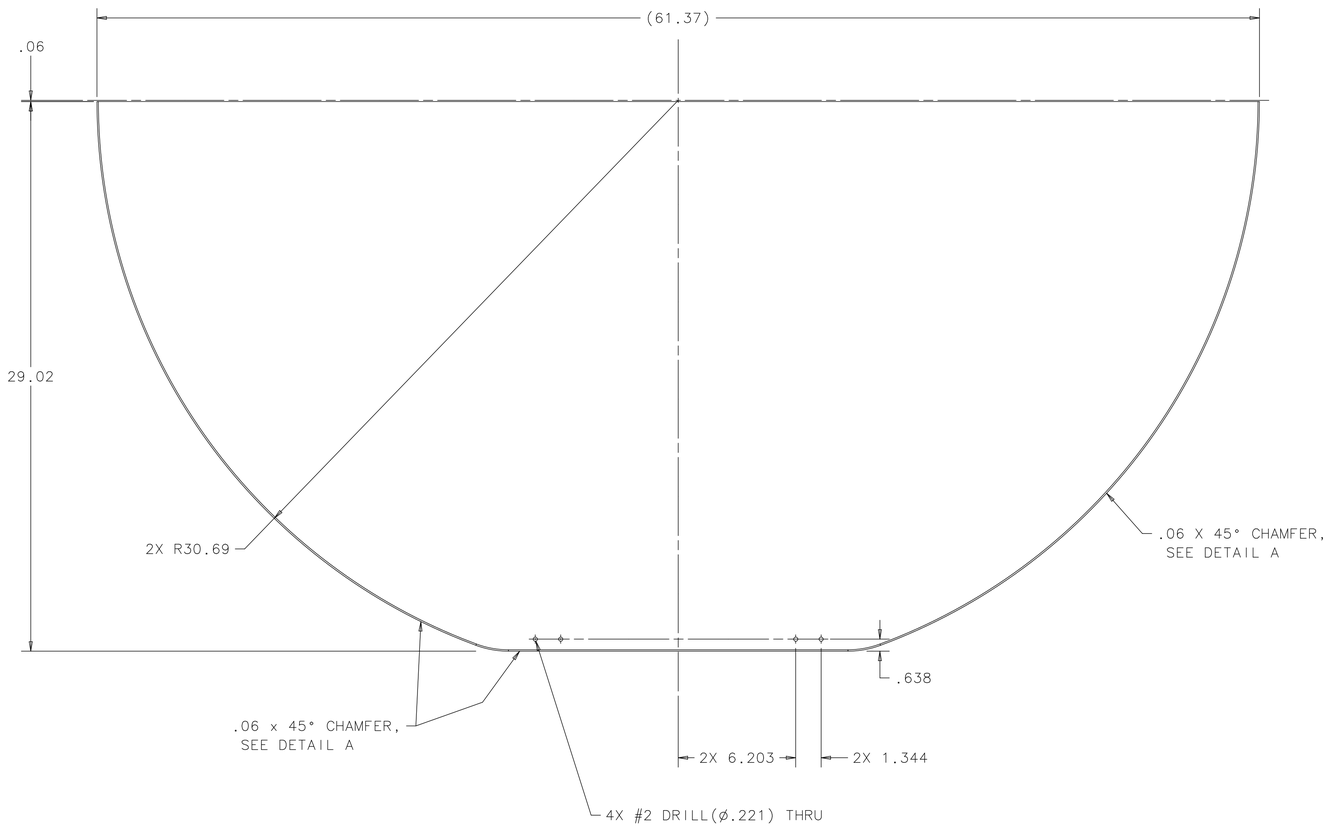

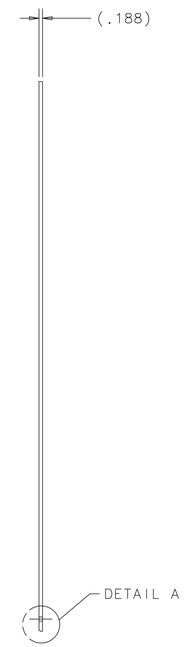

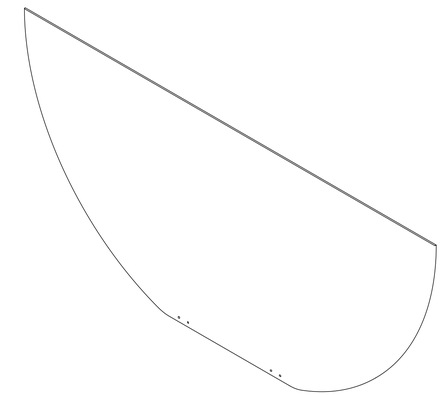

ISOMETRIC VIEW

SCALE: 1:8

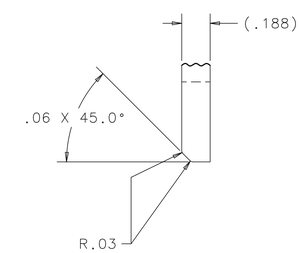

DETAIL A

SCALE: 2:1

A

EST. WEIGHT: 26.7 LBS.

UNLESS OTHERWISE SPECIFIED			ORIGINATOR	A.STEFANIK	24-MAR-2010
.XX	.XXX	ANGLES	DRAWN	K.CRAMPTON	25-MAR-2010
± .03	± .010	± 1°	CHECKED	J.RAUCH	13-JUL-2010
1. BREAK ALL SHARP EDGES .015 MAX. 2. DO NOT SCALE DRAWING. 3. DIMENSIONS BASED UPON ASME Y14.5M-1994 4. MAX. ALL MACH. SURFACES 250 √ 5. DRAWING UNITS: U.S. INCH			APPROVED	A.STEFANIK	20-JUL-2010
			USED ON	MD-480430	
			MATERIAL	6061-T6 ALUMINUM .188 INCH THICK A	

FERMI NATIONAL ACCELERATOR LABORATORY
UNITED STATES DEPARTMENT OF ENERGY

DECAM/CORRECTOR AND CAGE CAGE, AC DOOR 1 PF CAGE CWT AC DOOR 1

SCALE	DRAWING NUMBER	SHEET	REV
1:4 & AS NOTED	4900.123-MD-480338	1 OF 1	A

CREATED WITH : Ideas12NXSeries | GROUP: PPD/MECHANICAL DEPARTMENT

NOTICE: IMAGE OBTAINED FROM FERMILAB WEB SITE

This information is provided for REFERENCE use only. Not for MANUFACTURE, or DESIGN INFORMATION. All information contained in this document represents work sponsored by an agency of the U.S. Government. Neither the U.S. Government nor any agency thereof, nor Universities Research Association, Inc., nor any of their employees or officers, makes any warranty, express or implied, or assumes any legal liability or responsibility for the accuracy, completeness, or usefulness of any information, apparatus, product or process disclosed, or represents that its use would not infringe privately owned rights.