REV	DESCRIPTION	DRAWN	DATE
		APPROVED	DATE
A	IDM UPDATE	G SMITH	21-MAY-2011
		G SMITH	21-MAY-2011

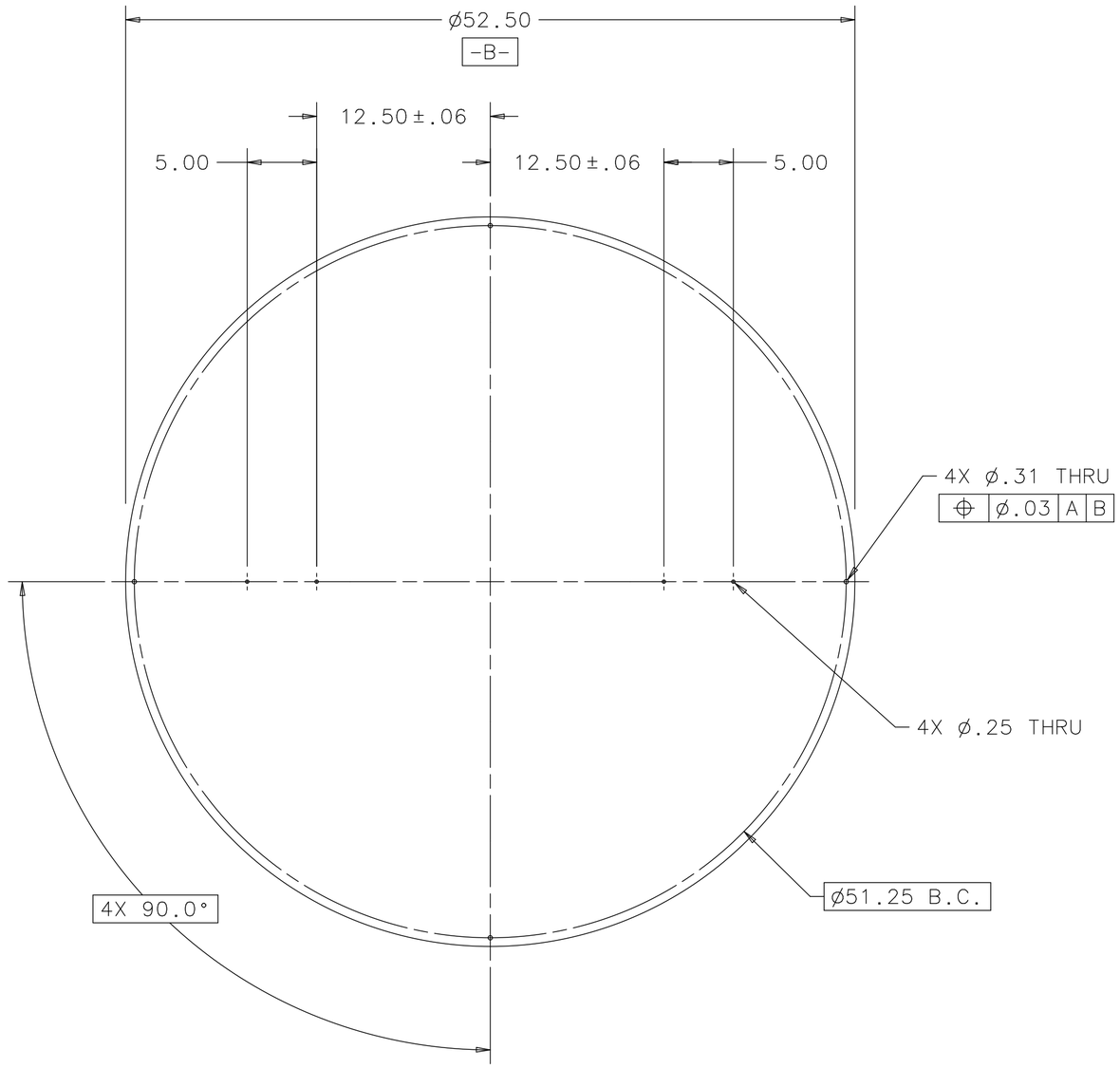

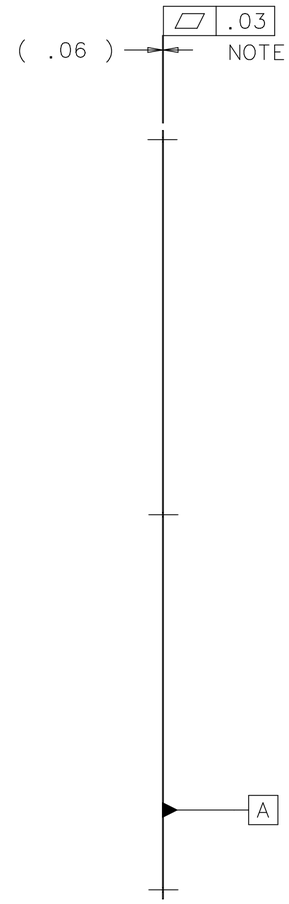

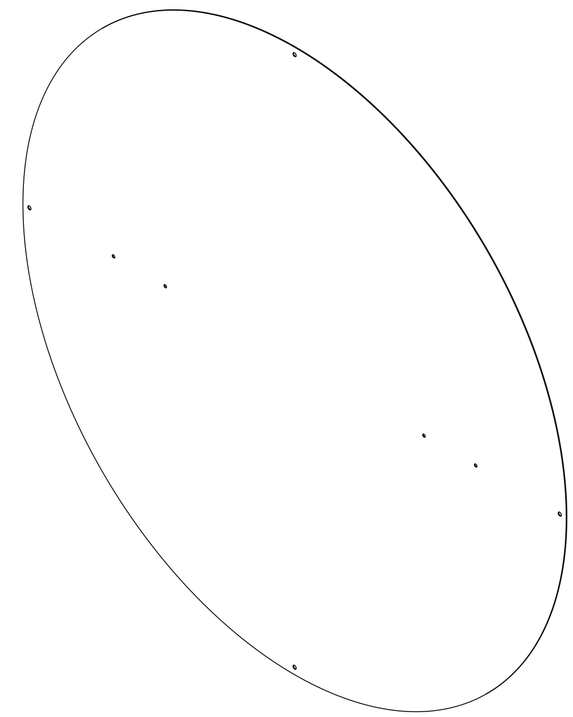

ISOMETRIC VIEW

NOTES

1. STOCK MATERIAL TO BE FLAT WITHIN .03 (DO NOT MACHINE THICKNESS).

UNLESS OTHERWISE SPECIFIED			ORIGINATOR	A.STEFANIK	10-MAR-2010
.XX	.XXX	ANGLES	DRAWN	V.MAJDANSKI	10-MAR-2010
± .02	± ---	± 1°	CHECKED	G.SMITH	21-APR-2010
			APPROVED	A.STEFANIK	21-APR-2010

1. BREAK ALL SHARP EDGES .015 MAX.
2. DO NOT SCALE DRAWING.
3. DIMENSIONS BASED UPON ASME Y14.5M-1994
4. MAX. ALL MACH. SURFACES 125
5. DRAWING UNITS: U.S. INCH

USED ON: MC-480297

MATERIAL: 6061-T6 ALUMINUM 1/16 STOCK THK.

FERMI NATIONAL ACCELERATOR LABORATORY
UNITED STATES DEPARTMENT OF ENERGY

DECAM/CORRECTOR AND CAGE CAGE PF CAGE LENS - LENS COVER

SCALE	DRAWING NUMBER	SHEET	REV
1:8	4900.123-MC-480296	1 OF 1	A

CREATED WITH : Ideas12NXSeries | GROUP: PPD/MECHANICAL DEPARTMENT

NOTICE: IMAGE OBTAINED FROM FERMILAB WEB SITE

This information is provided for REFERENCE use only. Not for MANUFACTURE, or DESIGN INFORMATION. All information contained in this document represents work sponsored by an agency of the U.S. Government. Neither the U.S. Government nor any agency thereof, nor Universities Research Association, Inc., nor any of their employees or officers, makes any warranty, express or implied, or assumes any legal liability or responsibility for the accuracy, completeness, or usefulness of any information, apparatus, product or process disclosed, or represents that its use would not infringe privately owned rights.