REV	DESCRIPTION	DRAWN / APPROVED	DATE / DATE
A	MATERIAL WAS ASTM-A572 GR50 STEEL 1.25" STK, NOT IT IS ASTM-A36 STEEL 1.25" STK	K.CRAMPTON	16-JUL-2010
		G.SMITH	16-JUL-2010

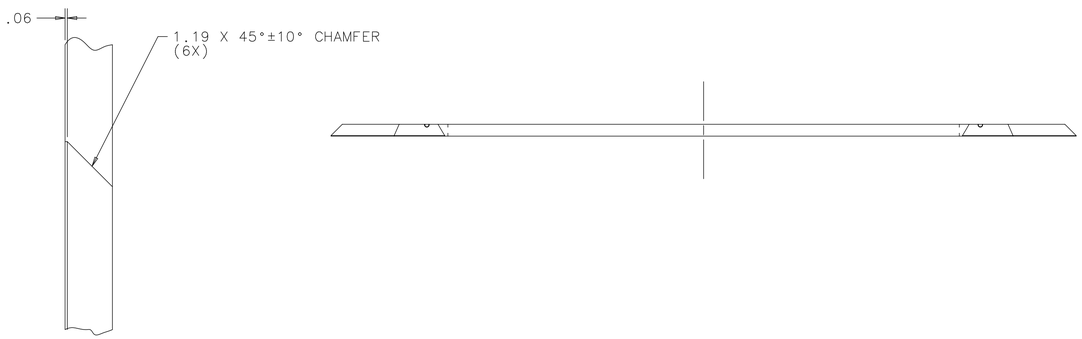

DETAIL A
SCALE: 1:2

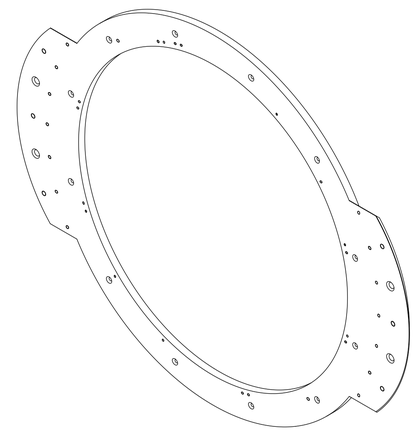

ISOMETRIC VIEW
SCALE : 3:32

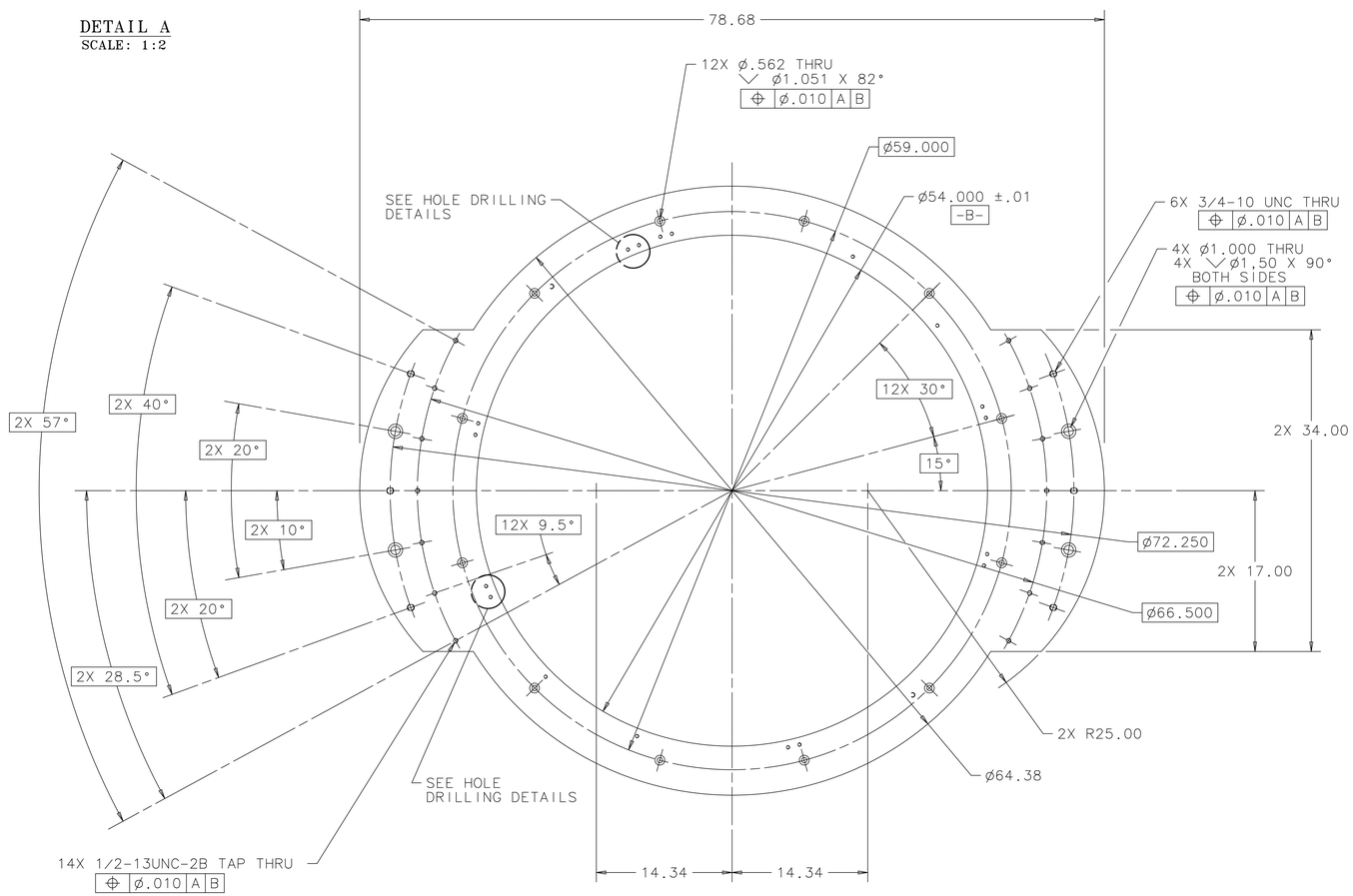

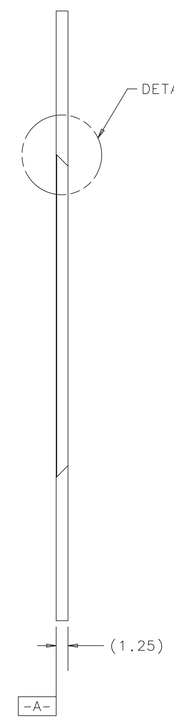

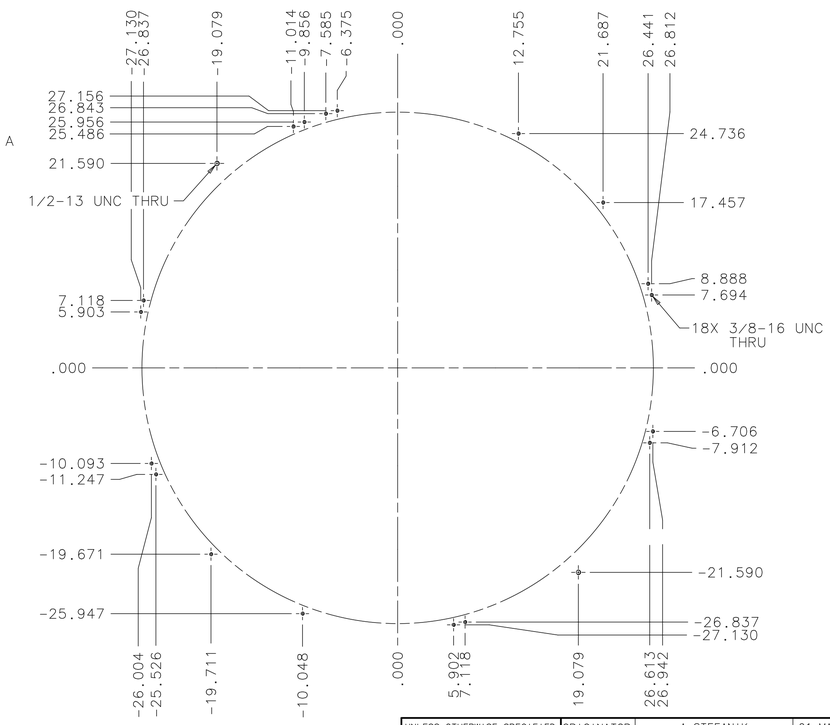

HOLE DRILLING DETAILS
ORDINATE DIM.

WEIGHT = 479 LBS.

UNLESS OTHERWISE SPECIFIED			ORIGINATOR	A.STEFANIK	01-MAR-2010
.XX	.XXX	ANGLES	DRAWN	J.MATESKI	01-MAR-2010
± .03	± .005	± ---	CHECKED	G.SMITH	01-JUL-2010
			APPROVED	A.STEFANIK	01-JUL-2010

1. BREAK ALL SHARP EDGES .015 MAX.
2. DO NOT SCALE DRAWING.
3. DIMENSIONS BASED UPON ASME Y14.5M-1994
4. MAX. ALL MACH. SURFACES 500
5. DRAWING UNITS: U.S. INCH

USED ON: MD-480390

MATERIAL: ASTM-A36 STEEL 1.25" STK (A)

FERMI NATIONAL ACCELERATOR LABORATORY
UNITED STATES DEPARTMENT OF ENERGY

DECAM/CORRECTOR AND CAGE CAGE COUNTERWEIGHT MOUNTING RING

SCALE	DRAWING NUMBER	SHEET	REV
1:8 & AS NOTED	4900.123-MD-480289	1 OF 1	A

CREATED WITH : Ideas12NXSeries | GROUP: PPD/MECHANICAL DEPARTMENT

NOTICE: IMAGE OBTAINED FROM FERMILAB WEB SITE

This information is provided for REFERENCE use only. Not for MANUFACTURE, or DESIGN INFORMATION. All information contained in this document represents work sponsored by an agency of the U.S. Government. Neither the U.S. Government nor any agency thereof, nor Universities Research Association, Inc., nor any of their employees or officers, makes any warranty, express or implied, or assumes any legal liability or responsibility for the accuracy, completeness, or usefulness of any information, apparatus, product or process disclosed, or represents that its use would not infringe privately owned rights.