REV	DESCRIPTION	DRAWN	DATE
		APPROVED	DATE
A	.015 R. ADDED DETAIL B ADDED	G SMITH	05-05-2010
		A STEFANIK	05-06-2010
B	.015 R. REMOVED BREAK EDGE LABEL ADDED	G SMITH	05-20-2010
		A STEFANIK	05-20-2010

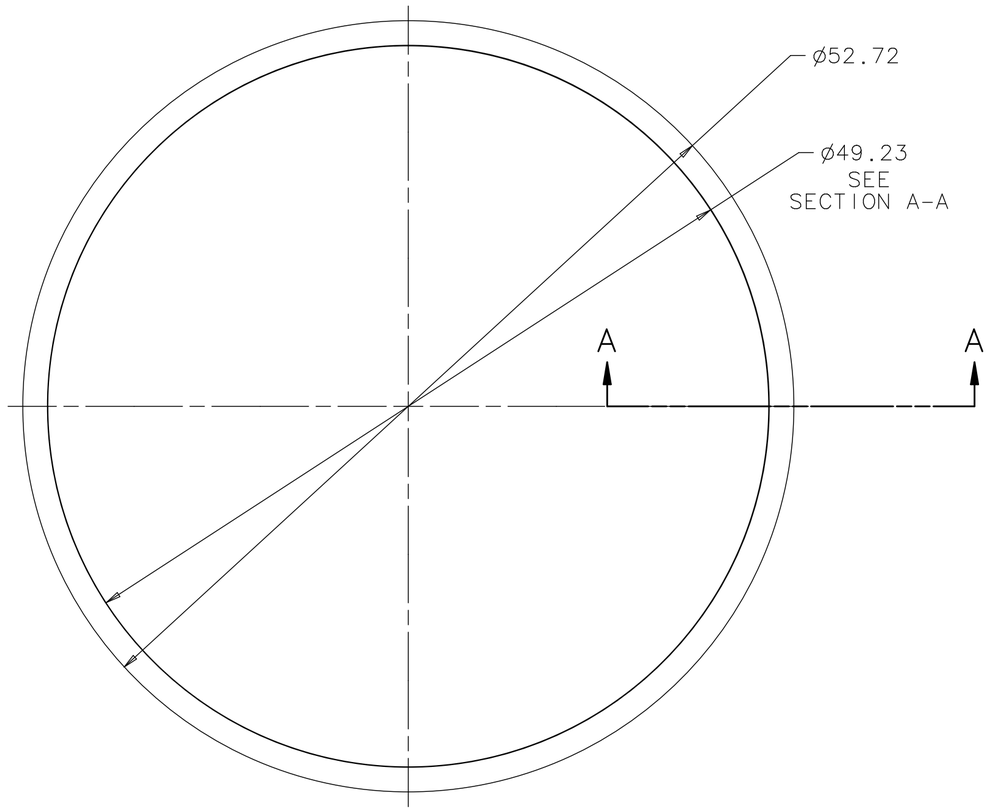

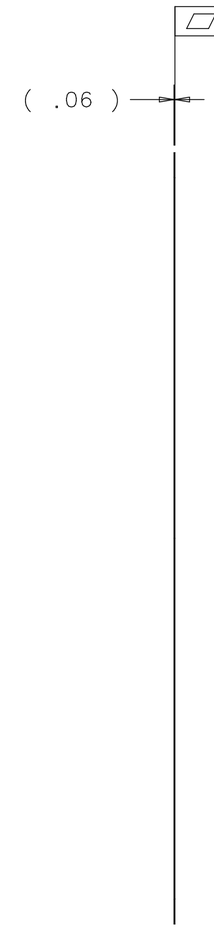

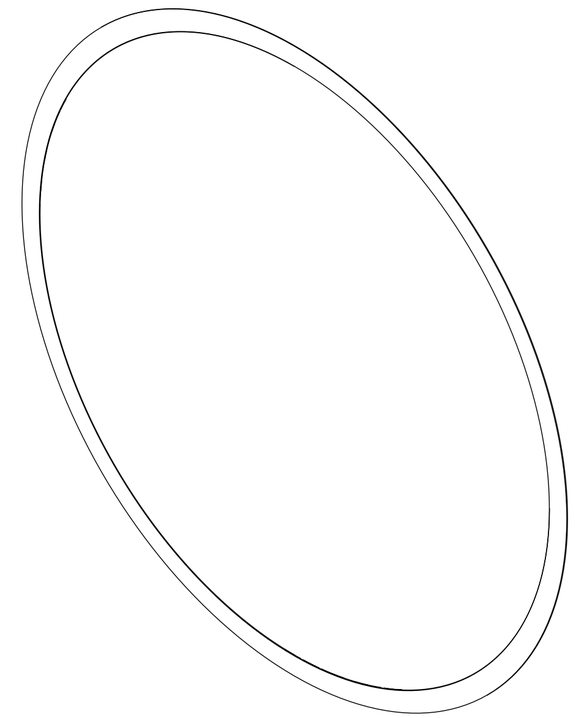

ISOMETRIC VIEW

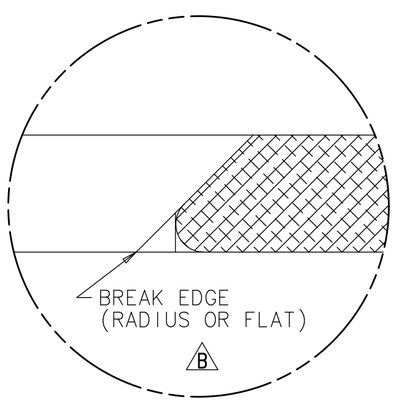

DETAIL B
SCALE 16:1

A

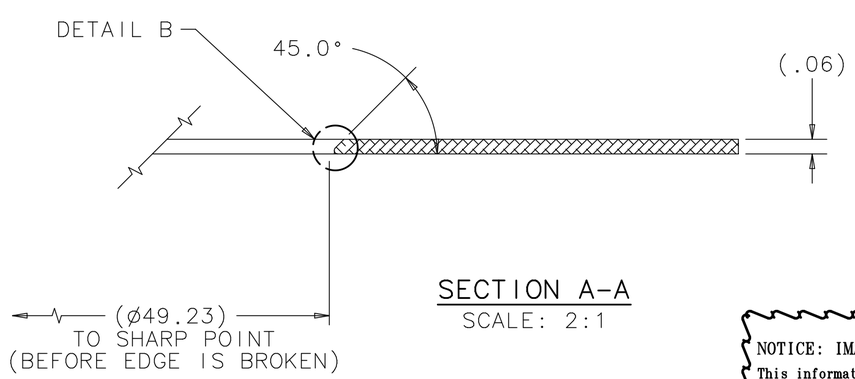

SECTION A-A
SCALE: 2:1

NOTES
1. STOCK MATERIAL TO BE FLAT WITHIN .03 (DO NOT MACHINE THICKNESS).

NOTICE: IMAGE OBTAINED FROM FERMILAB WEB SITE

This information is provided for REFERENCE use only. Not for MANUFACTURE, or DESIGN INFORMATION. All information contained in this document represents work sponsored by an agency of the U.S. Government. Neither the U.S. Government nor any agency thereof, nor Universities Research Association, Inc., nor any of their employees or officers, makes any warranty, express or implied, or assumes any legal liability or responsibility for the accuracy, completeness, or usefulness of any information, apparatus, product or process disclosed, or represents that its use would not infringe privately owned rights.

UNLESS OTHERWISE SPECIFIED			ORIGINATOR	A.STEFANIK	08-FEB-2010
.XX	.XXX	ANGLES	DRAWN	V.MAJDANSKI	08-FEB-2010
± .02	± .005	± 1°	CHECKED	G.SMITH	21-APR-2010
			APPROVED	A.STEFANIK	21-APR-2010

1. BREAK ALL SHARP EDGES .015 MAX.
2. DO NOT SCALE DRAWING.
3. DIMENSIONS BASED UPON ASME Y14.5M-1994
4. MAX. ALL MACH. SURFACES 125
5. DRAWING UNITS: U.S. INCH

USED ON: 4900.123-ME-480234

MATERIAL: 6061-T6 ALUMINUM 1/16 STOCK THK.

FERMI NATIONAL ACCELERATOR LABORATORY
UNITED STATES DEPARTMENT OF ENERGY

DECAM/CORRECTOR AND CAGE CAGE LIGHT BAFFLE 2

SCALE	DRAWING NUMBER	SHEET	REV
1:8 & AS NOTED	4900.123-MC-480227	1 OF 1	B

CREATED WITH : Ideas12NXSeries | GROUP: PPD/MECHANICAL DEPARTMENT