REV	DESCRIPTION	DRAWN	DATE
		APPROVED	DATE
A	ITEM 1 & ITEM 2 BALLONS REVERSED	G SMITH	05-NOV-2009
		G SMITH	08-DEC-2009
B	(16) 5/8-11 TAPPED HOLES ADDED NOTE 2 ADDED	G SMITH	29-DEC-2009
		A. STEFANIK	25-JAN-2010
C	ITEM 3 ADDED	G SMITH	07-APR-2009
		A. STEFANIK	07-APR-2009

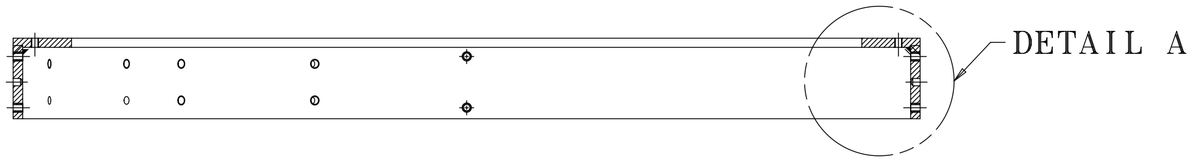

SECTION A-A

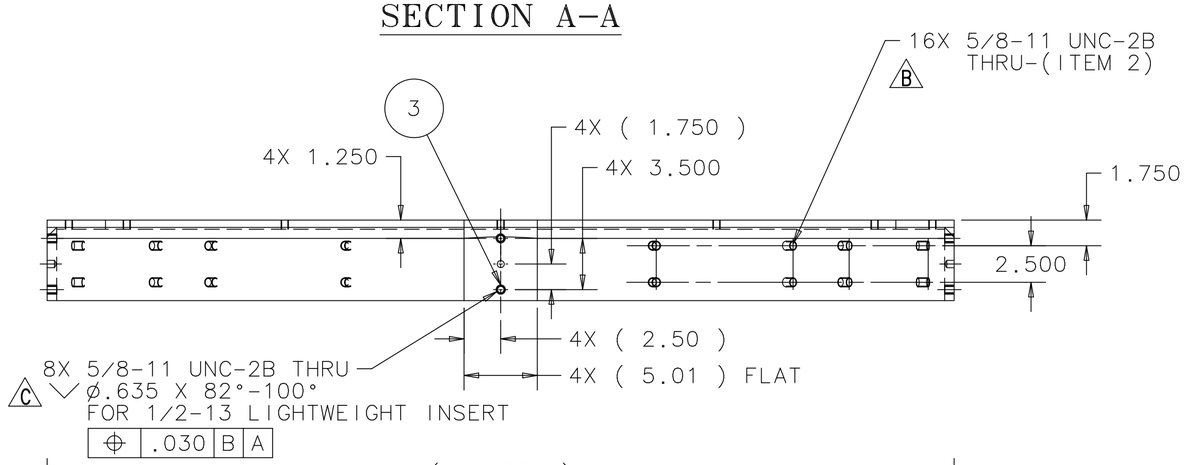

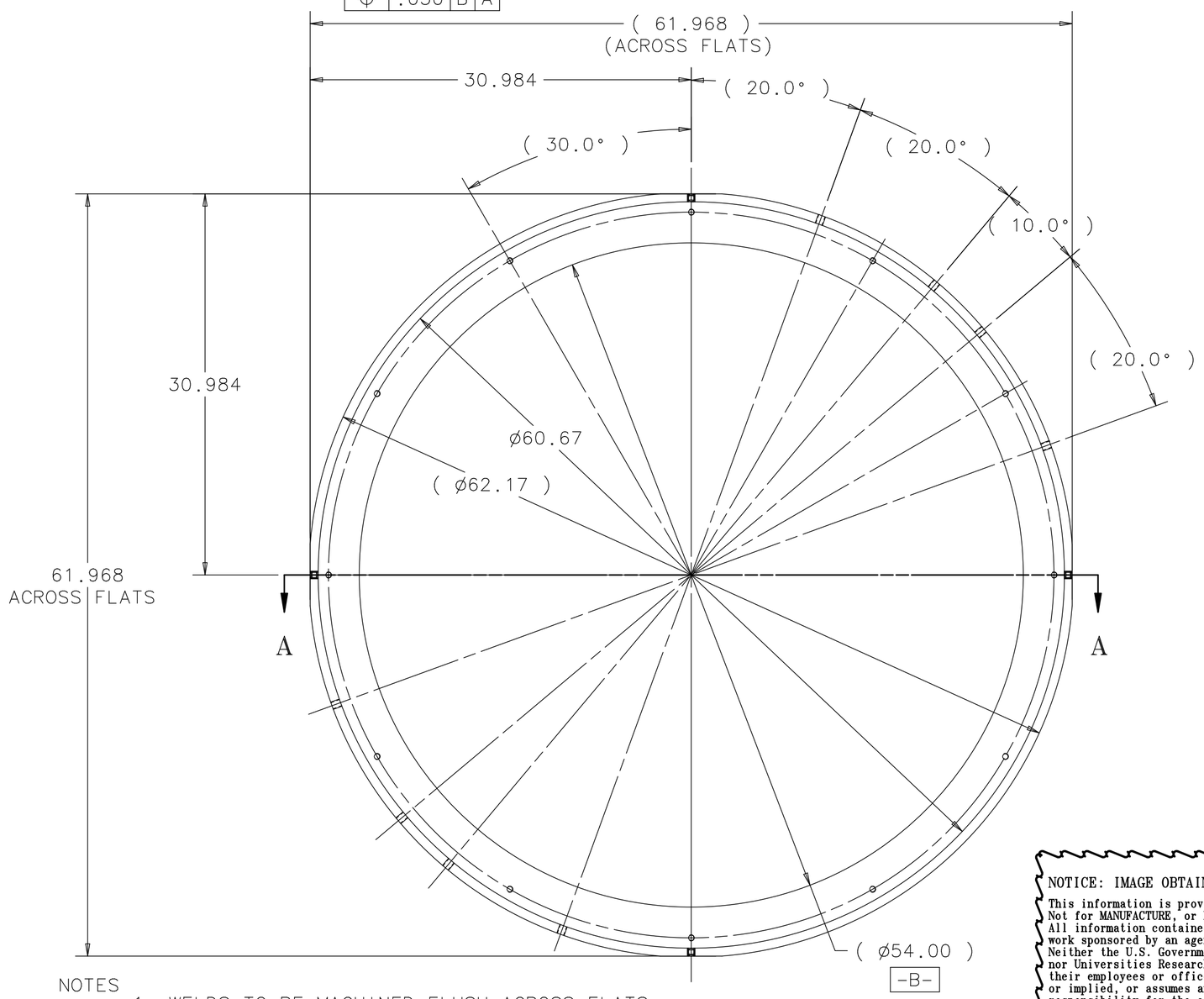

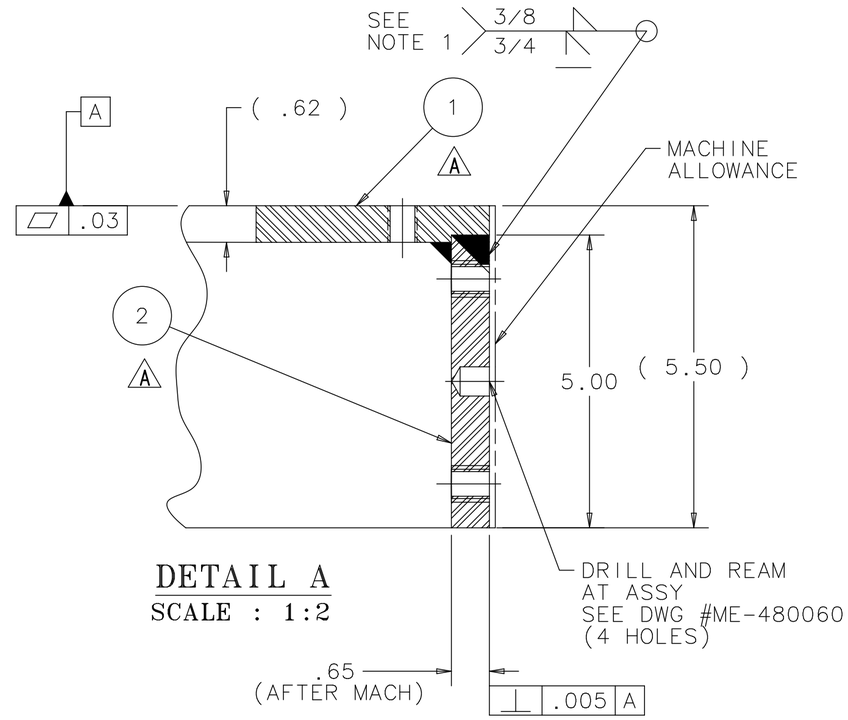

DETAIL A
SCALE : 1:2

ITEM	PART NO.	DESCRIPTION OR SIZE	QTY.
3	COML	LIGHTWEIGHT KEENSERT INSERT (WITHOUT INTERNAL LOCKING THREADS) ALCOA PART #KN813J-SHEAR ENGAG=.7175	1
2	COML	ASTM A36 H.R.S.- 62.17 O.D. X 60.67 I.D. X 5.00 THK.	1
1	MC-480062	PF CAGE COUNTERWEIGHT CAP	1

PARTS LIST

UNLESS OTHERWISE SPECIFIED					
.XX	.XXX	ANGLES	ORIGINATOR	A.STEFANIK	09-OCT-2009
± .03	± .010	± ---	DRAWN	G.SMITH	09-OCT-2009
			CHECKED	J.RAUCH	20-OCT-2009
			APPROVED	K.KREMPETZ	20-OCT-2009

1. BREAK ALL SHARP EDGES .015 MAX.
2. DO NOT SCALE DRAWING.
3. DIMENSIONS BASED UPON ASME Y14.5M-1994
4. MAX. ALL MACH. SURFACES 125
5. DRAWING UNITS: U.S. INCH

USED ON
4900.123-ME-480060
4900.123-ME-480103

MATERIAL
SEE PARTS LIST ABOVE

FERMI NATIONAL ACCELERATOR LABORATORY
UNITED STATES DEPARTMENT OF ENERGY

DECAM/CORRECTOR AND CAGE
PF CAGE SUB-ASSEMBLY
PF CAGE COUNTERWEIGHT PLT WELD

SCALE	DRAWING NUMBER	SHEET	REV
1:8 & AS NOTED	4900.123-MC-480061	1 OF 1	C

CREATED WITH : Ideas12NXSeries | GROUP: PPD/MECHANICAL DEPARTMENT

NOTES
1. WELDS TO BE MACHINED FLUSH ACROSS FLATS.
2. ALL MACHINING DRILLING AND TAPPING TO BE DONE AFTER WELDING.

NOTICE: IMAGE OBTAINED FROM FERMILAB WEB SITE
This information is provided for REFERENCE use only.
Not for MANUFACTURE, or DESIGN INFORMATION.
All information contained in this document represents work sponsored by an agency of the U.S. Government.
Neither the U.S. Government nor any agency thereof, nor Universities Research Association, Inc., nor any of their employees or officers, makes any warranty, express or implied, or assumes any legal liability or responsibility for the accuracy, completeness, or usefulness of any information, apparatus, product or process disclosed, or represents that its use would not infringe privately owned rights.