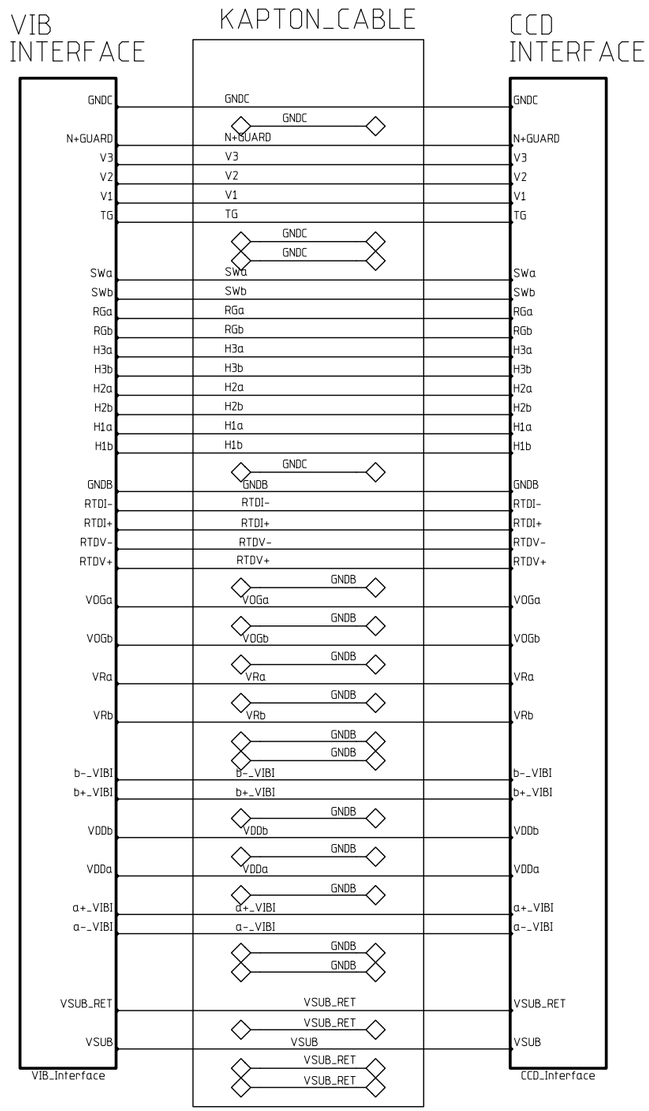


| | | | |
|---|---|---|---|
| MODIFIED 9/19/2008 9:23:48 AM | | | |
| EED Department | ORIGINATOR | originator | DATE date |
| | DRAWN | drawn | DATE date |
| | CHECKED | checked | DATE date |
| | APPROVED | approved | DATE date |

Fermi National Accelerator Laboratory
United States Department of Energy

U:\CAD Projects\DES Cad Projects\PPD_JOBS6\Decam_Integrated_Cable_V3\Decam_Integrated_Cable_V3.prj

| SIZE | DRAWING NUMBER | | REV |
|---|---|---|---|
| C | 173707 | Schematic Page 01 of 01 | A |

H=4ND; V=4LA

# CCD Interface
# with dual JFET buffers - Integrated V1

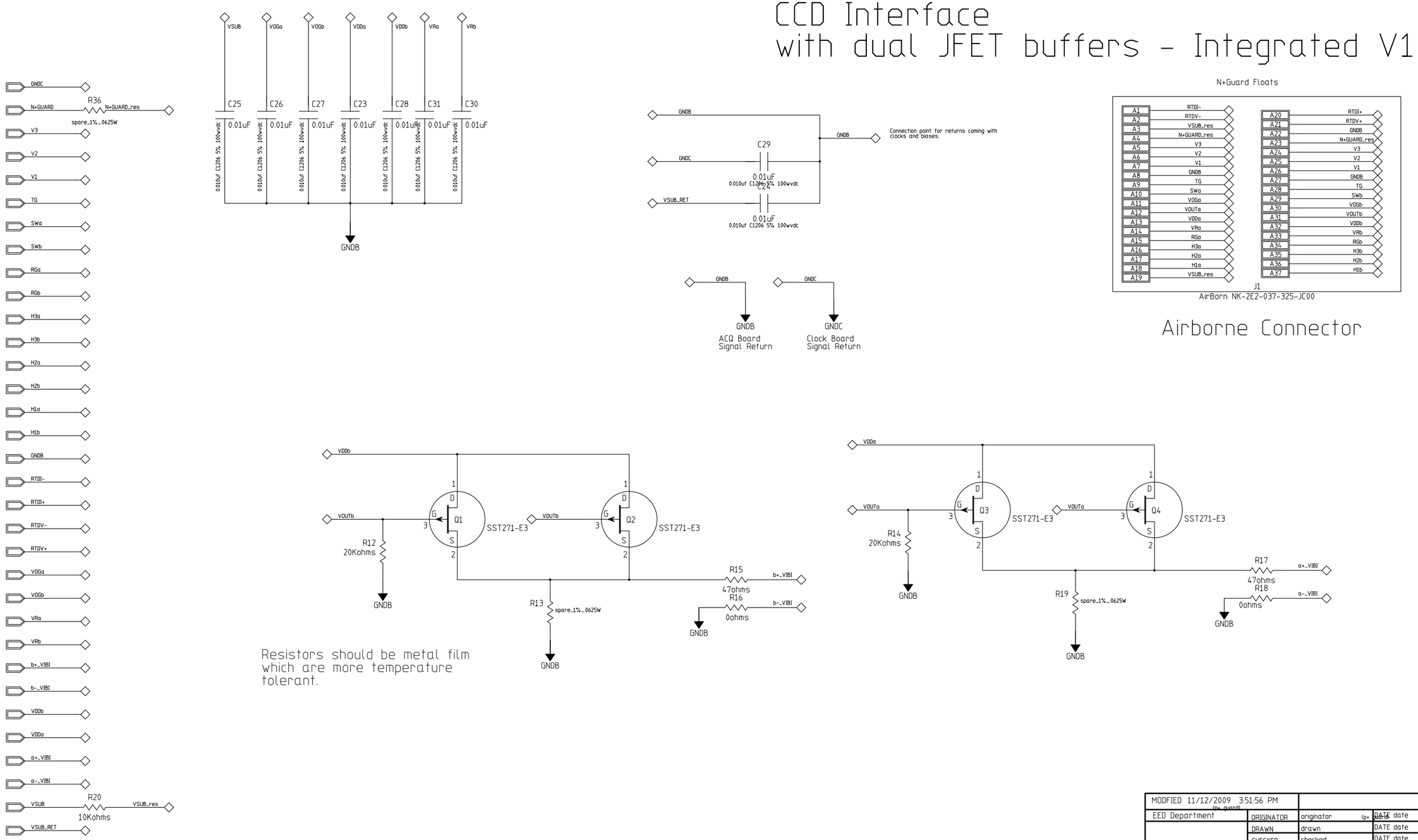


| | | | |
|---|---|---|---|
| MODIFIED 11/12/2009 3:51:56 PM (p+ guard) | | | |
| EED Department | ORIGINATOR | originator (p+ guard) | DATE date |
| | DRAWN | drawn | DATE date |
| | CHECKED | checked | DATE date |
| | APPROVED | approved | DATE date |

Fermi National Accelerator Laboratory
United States Department of Energy

U:\CAD Projects\DES Cad Projects\PPD_JOBS6\Decam_Integrated_Cable_V3\Decam_Integrated_Cable_V3.prj

.

| SIZE | DRAWING NUMBER | | REV |
|---|---|---|---|
| D | 173707 | Schematic Page 01 of 01 | A |

H=8ND, V=4LA

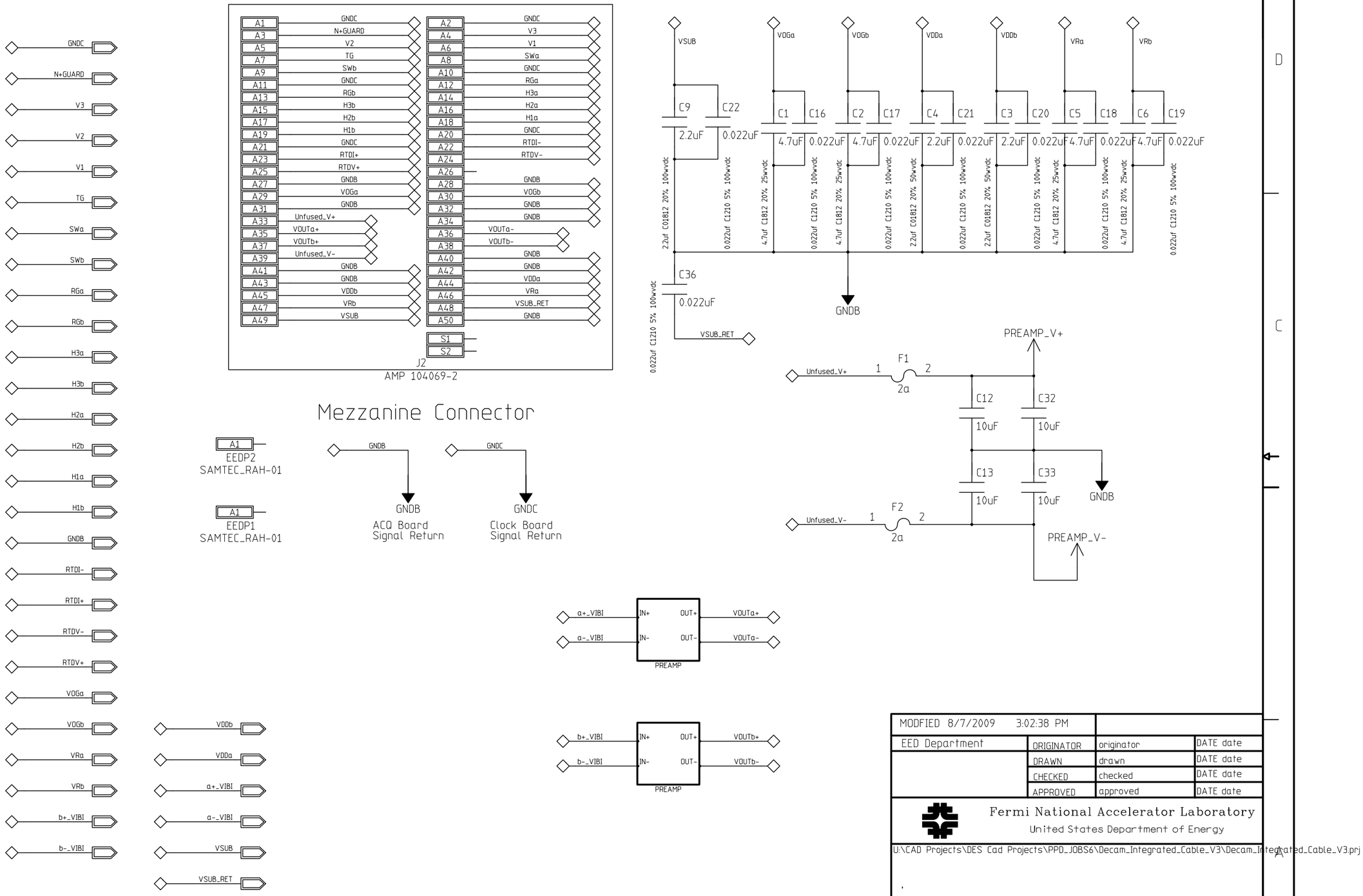


| | | | |
|---|---|---|---|
| MODIFIED 8/7/2009 3:02:38 PM | | | |
| EED Department | ORIGINATOR | originator | DATE date |
| | DRAWN | drawn | DATE date |
| | CHECKED | checked | DATE date |
| | APPROVED | approved | DATE date |

Fermi National Accelerator Laboratory
United States Department of Energy

U:\CAD Projects\DES Cad Projects\PPD_JOBS6\Decam_Integrated_Cable_V3\Decam_Integrated_Cable_V3.prj

| SIZE | DRAWING NUMBER | | REV |
|---|---|---|---|
| C | 173707 | Schematic Page 01 of 01 | A |

H=4ND; V=4LA

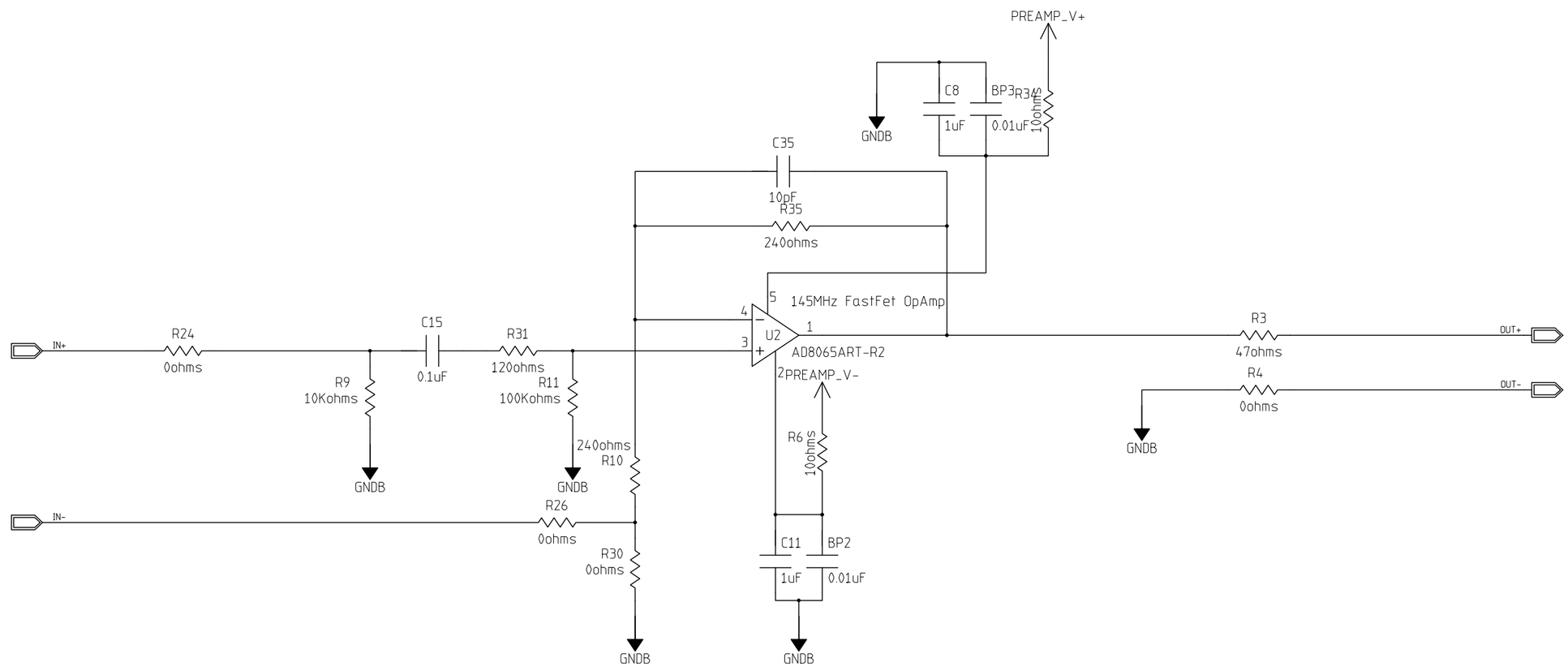


| | | | |
|---|---|---|---|
| MODFIED 8/7/2009 3:04:44 PM | | | |
| EED Department | ORIGINATOR | originator | DATE date |
| | DRAWN | drawn | DATE date |
| | CHECKED | checked | DATE date |
| | APPROVED | approved | DATE date |

Fermi National Accelerator Laboratory
United States Department of Energy

U:\CAD Projects\DES Cad Projects\PPD_JOBS6\Decam_Integrated_Cable_V3\Decam_Integrated_Cable_V3.prj

| SIZE | DRAWING NUMBER | | REV |
|---|---|---|---|
| C | 173707 | Schematic Page 01 of 01 | A |

H=4ND; V=4LA

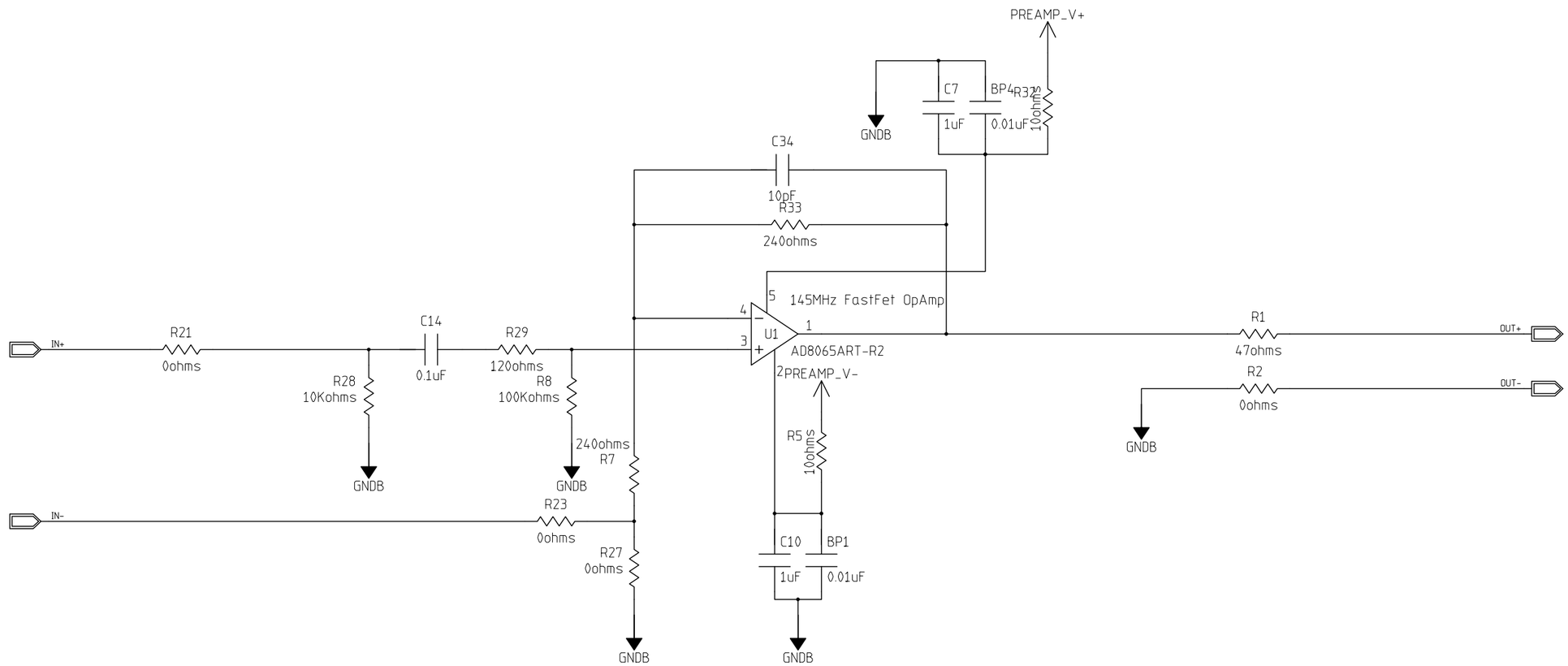


| | | | |
|---|---|---|---|
| MODFIED 8/7/2009 3:04:44 PM | | | |
| EED Department | ORIGINATOR | originator | DATE date |
| | DRAWN | drawn | DATE date |
| | CHECKED | checked | DATE date |
| | APPROVED | approved | DATE date |

Fermi National Accelerator Laboratory
United States Department of Energy

U:\CAD Projects\DES Cad Projects\PPD_JOBS6\Decam_Integrated_Cable_V3\Decam_Integrated_Cable_V3.prj

| SIZE | DRAWING NUMBER | | REV |
|---|---|---|---|
| C | 173707 | Schematic Page 01 of 01 | A |

H=4ND; V=4LA