DARK ENERGY
SURVEY

DECam Corrector Optics Anti-reflection Coatings

D. L. DePoy

DECam at the Prime Focus of the Blanco

DARK ENERGY SURVEY

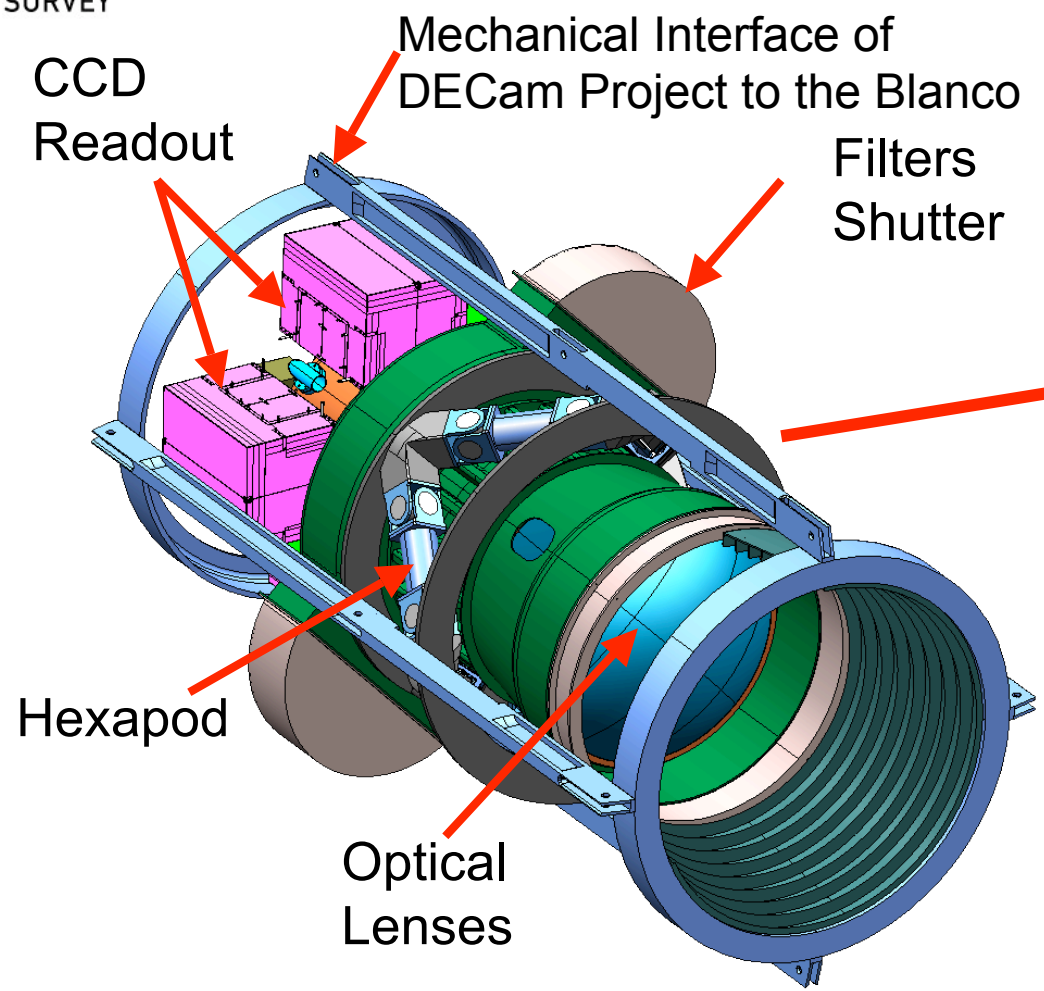

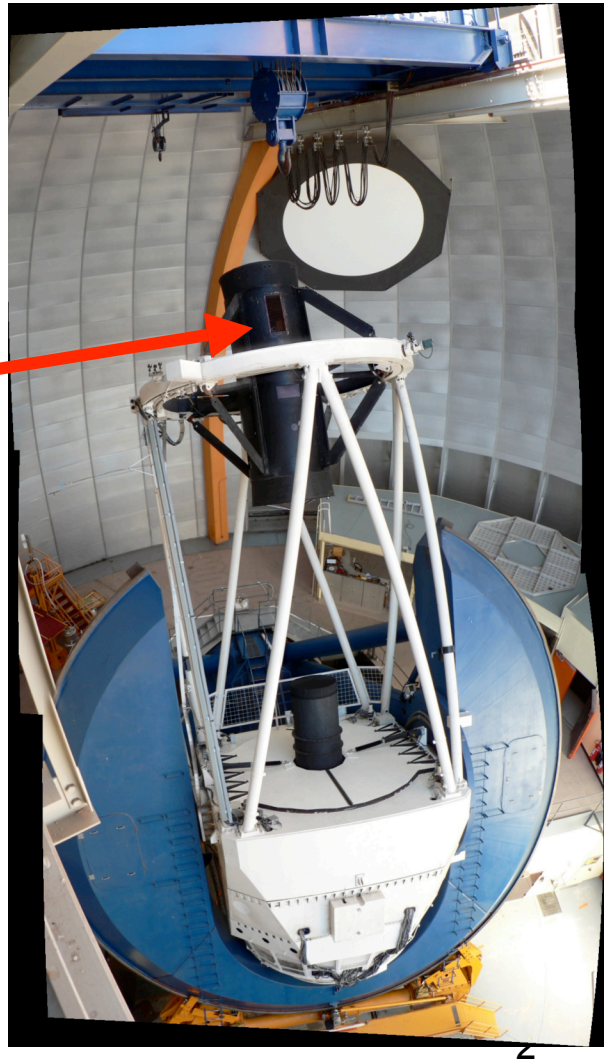

Big Optical Elements!

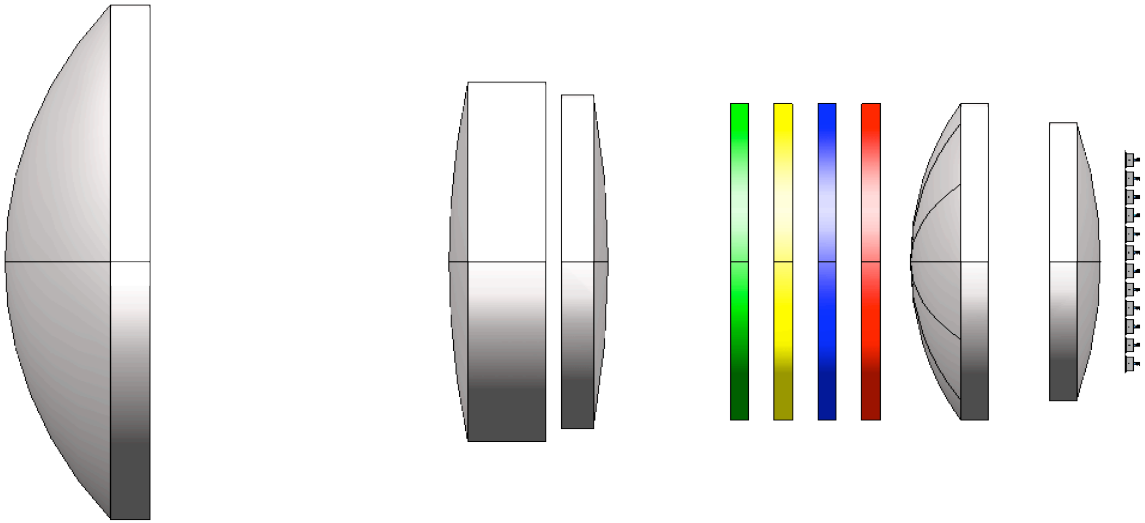

C1 : 140 Kg (309 Lbs), 940 mm OD, 237.2 mm depth.
C2 : 72 Kg (159 Lbs), 658 mm OD, 158.7 mm depth.
C3 : 41 Kg (90 Lbs), 610 mm OD, 76.8 mm depth.
C4 : 40 Kg (88 Lbs), 578 mm OD, 127.8 mm depth.
C5 : 24 Kg (60 Lbs), 508 mm OD, 83.3 mm depth.

Coatings

- Coating Requirements
  - High throughput
    - Maximizes sensitivity
  - Low reflectivity
    - Minimizes ghosts
  - Uniform
    - Minimize photometric error
  - Rugged and reliable
    - Must work and survive years in observatory conditions
    - Must be able to be handled
  - Low risk
    - Choice must pose low risk to project schedule and budget

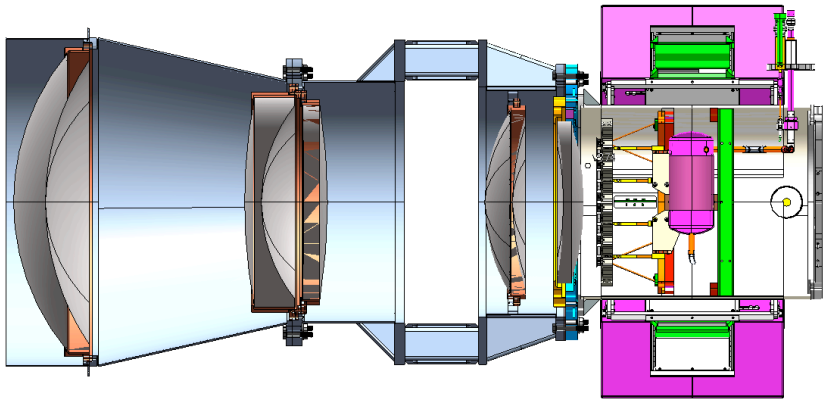

Choices

- No coating
  - Low risk
  - Inexpensive
  - Relatively poor performance
    - 3.5% reflection per surface
- Single layer anti-reflection coating
  - MgF_2
  - Low risk
  - Relatively inexpensive
  - Reasonable performance
    - <2.5% reflection per surface
- Multi-layer dielectric coating
  - Higher risk
    - Risk to C1 very high
  - Most expensive
  - Best performance
    - <1.5% reflection per surface

Decisions

- Coat C1 with MgF_2
  - Acceptable risk and performance
- Allow development by vendor for C2-C5 coatings
  - Success if <1.5% reflection per surface & 0.5% uniformity
- Uniformity specification
  - 0.5% acceptable for all lenses

Typical Coating

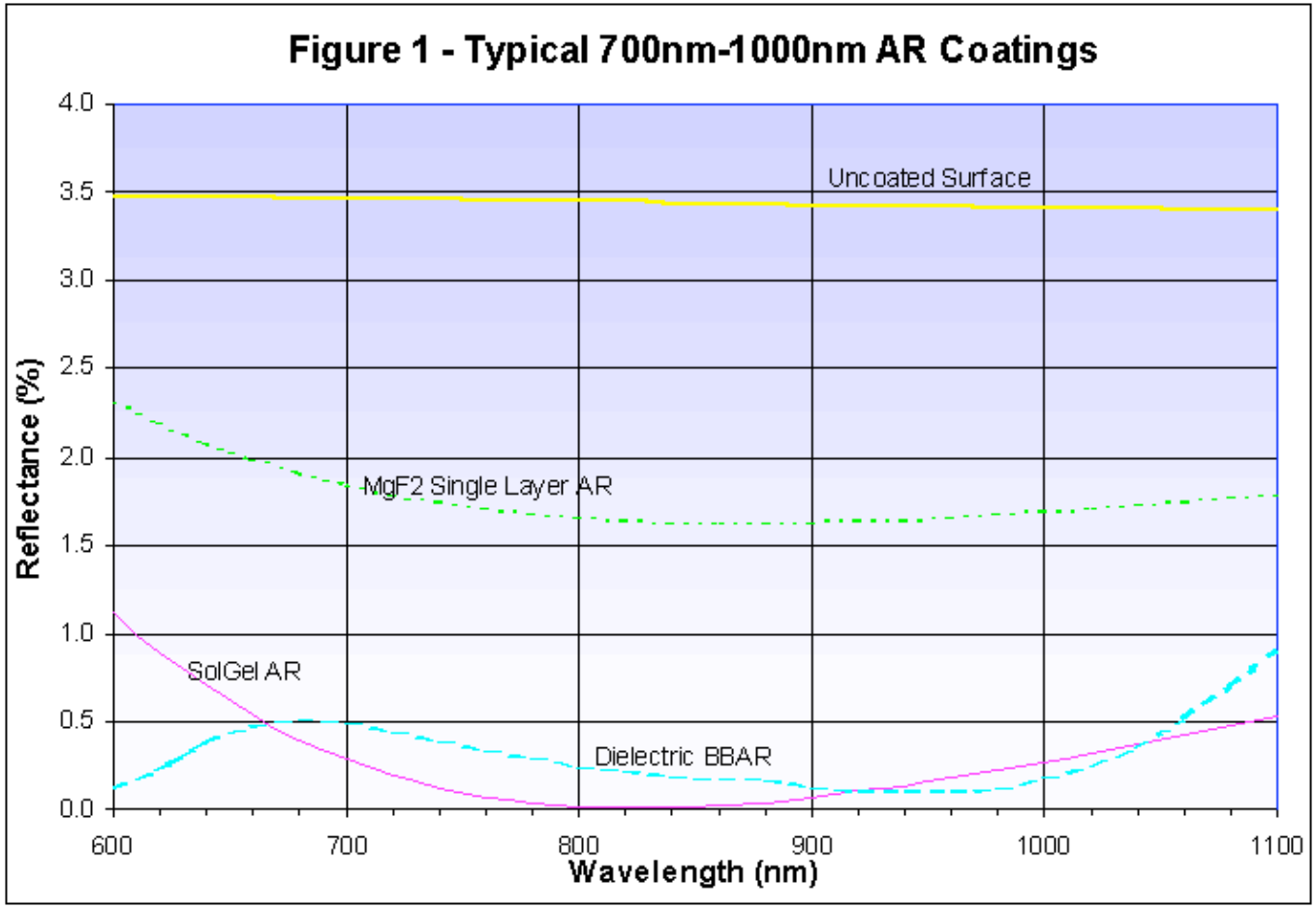

Typical Coating

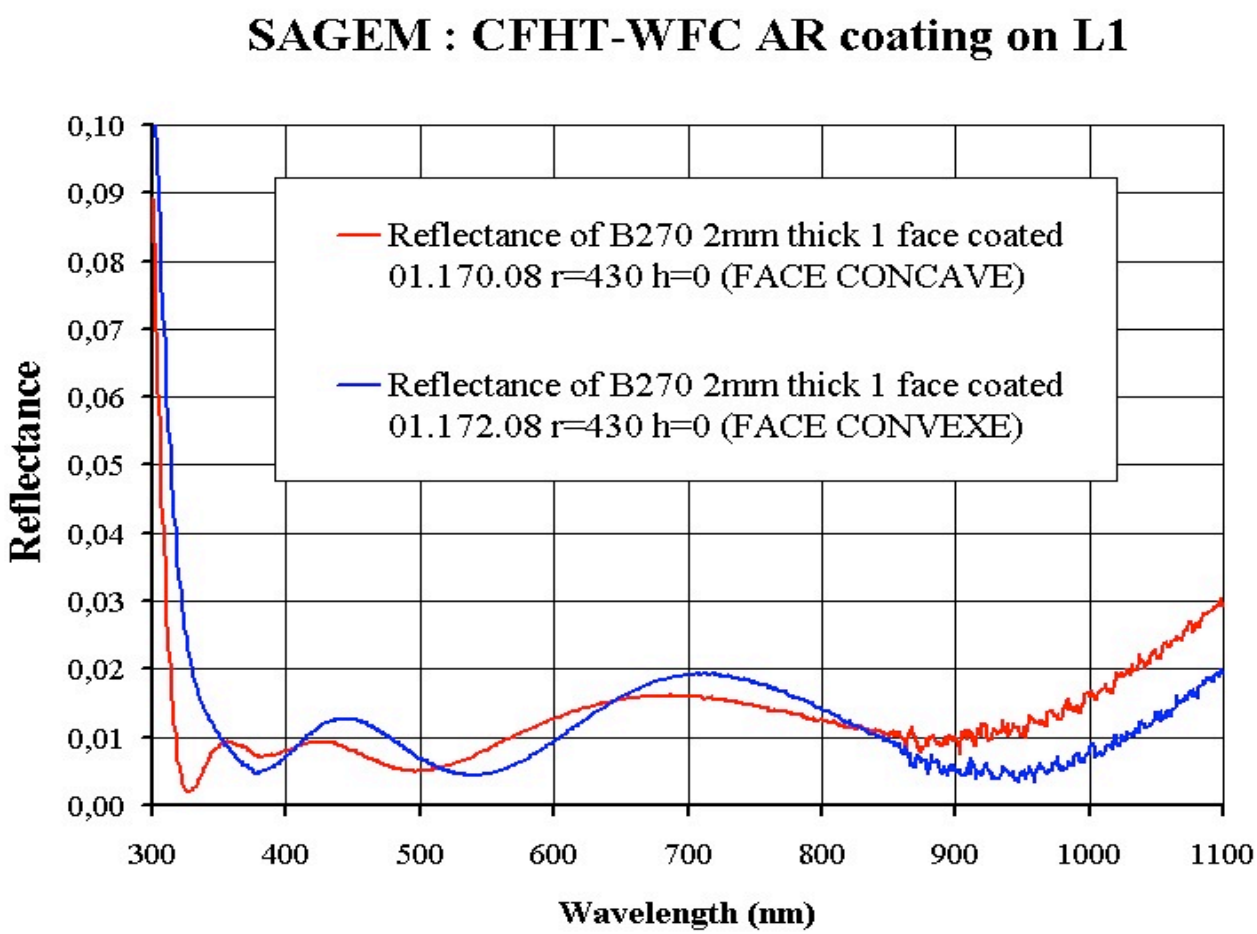

Typical Coating

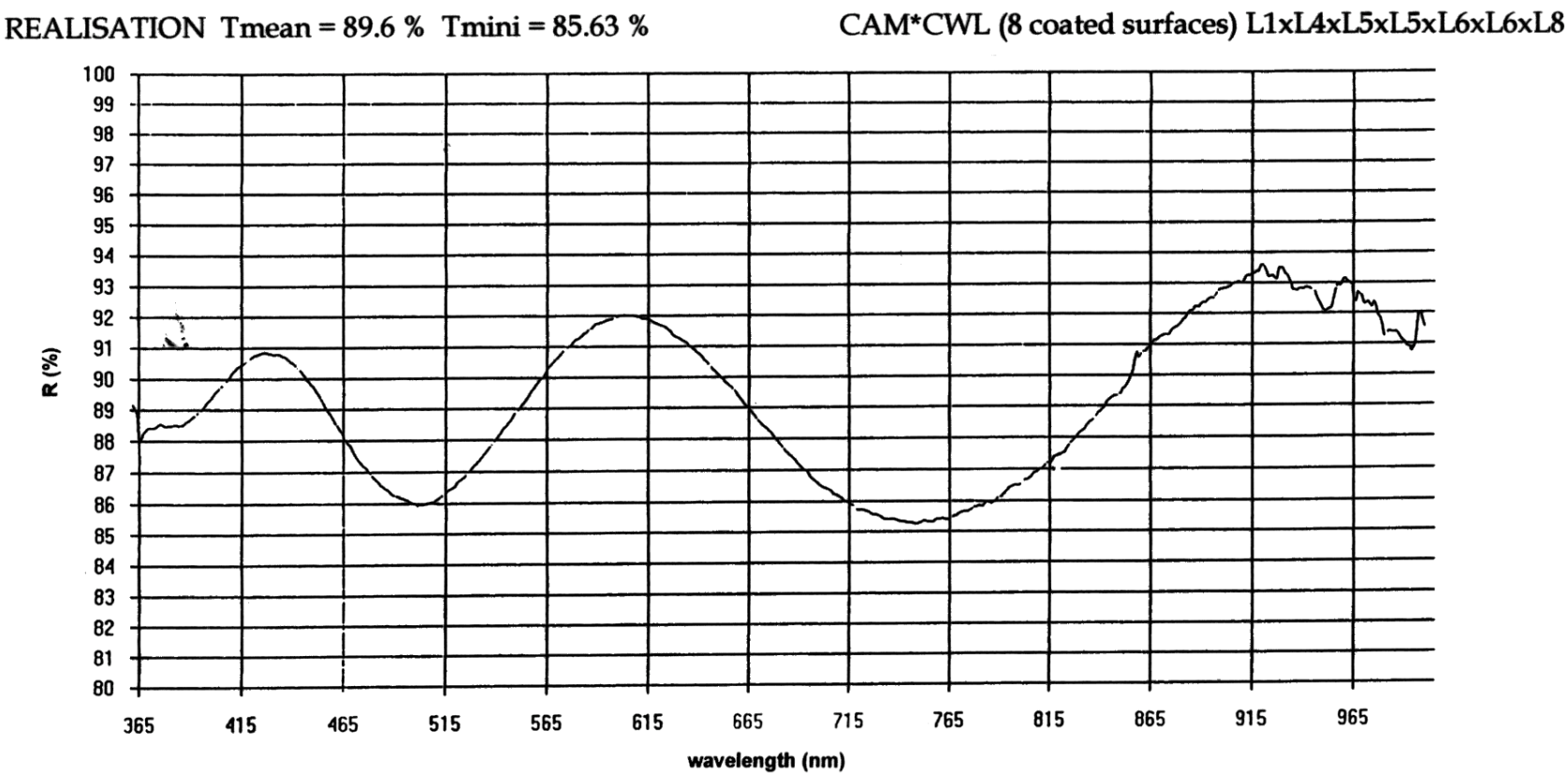

Example of Radial Variation

DARK ENERGY SURVEY

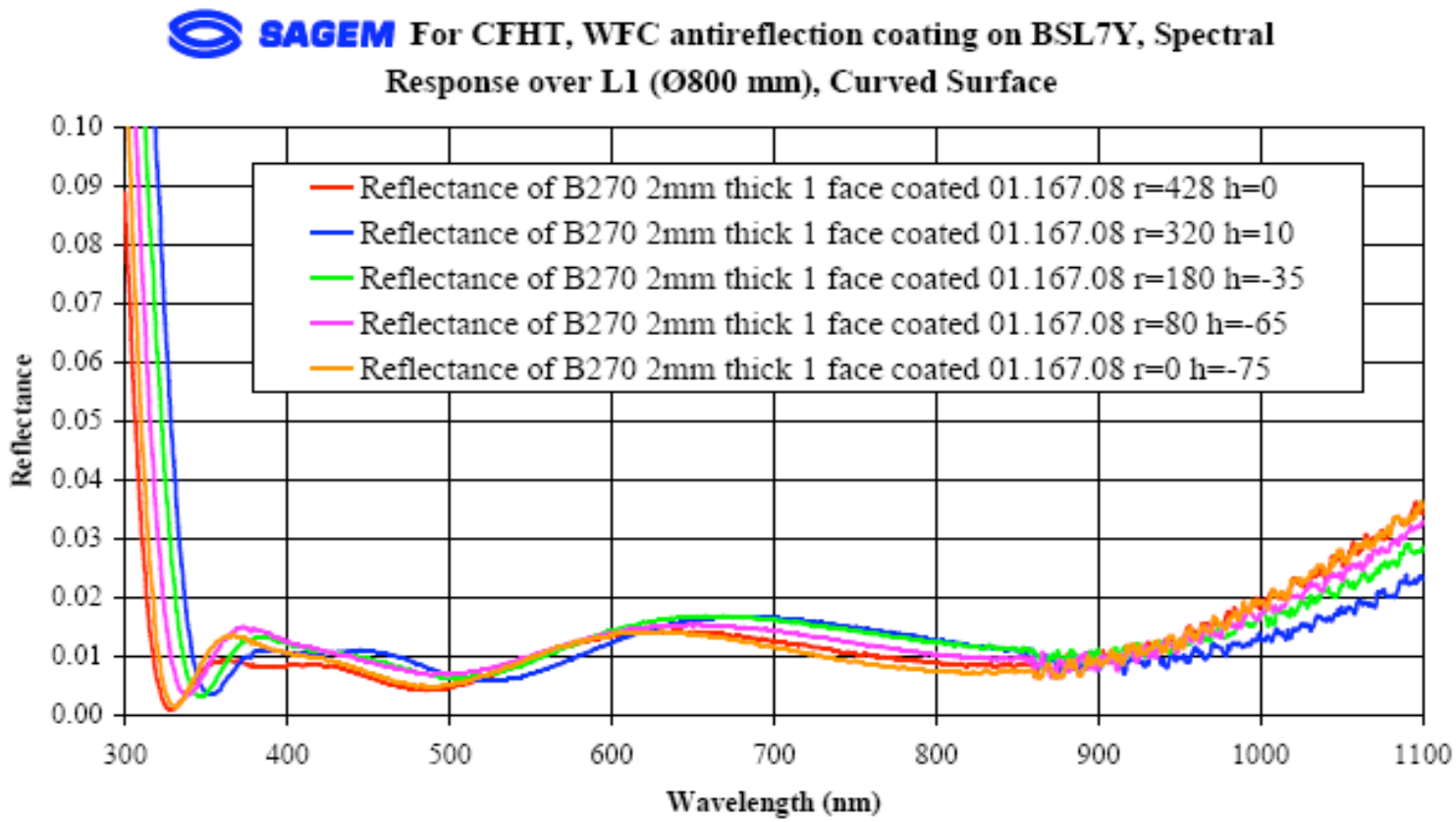

Decisions

- Coat C1 with MgF_2
  - Acceptable risk and performance
- Allow development by vendor for C2-C5 coatings
  - Success if <1.5% reflection per surface & 0.5% uniformity
- Uniformity specification
  - 0.5% acceptable for all lenses
- Filter uniformity will dominate