REV	DESCRIPTION	DRAWN	DATE
		APPROVED	DATE

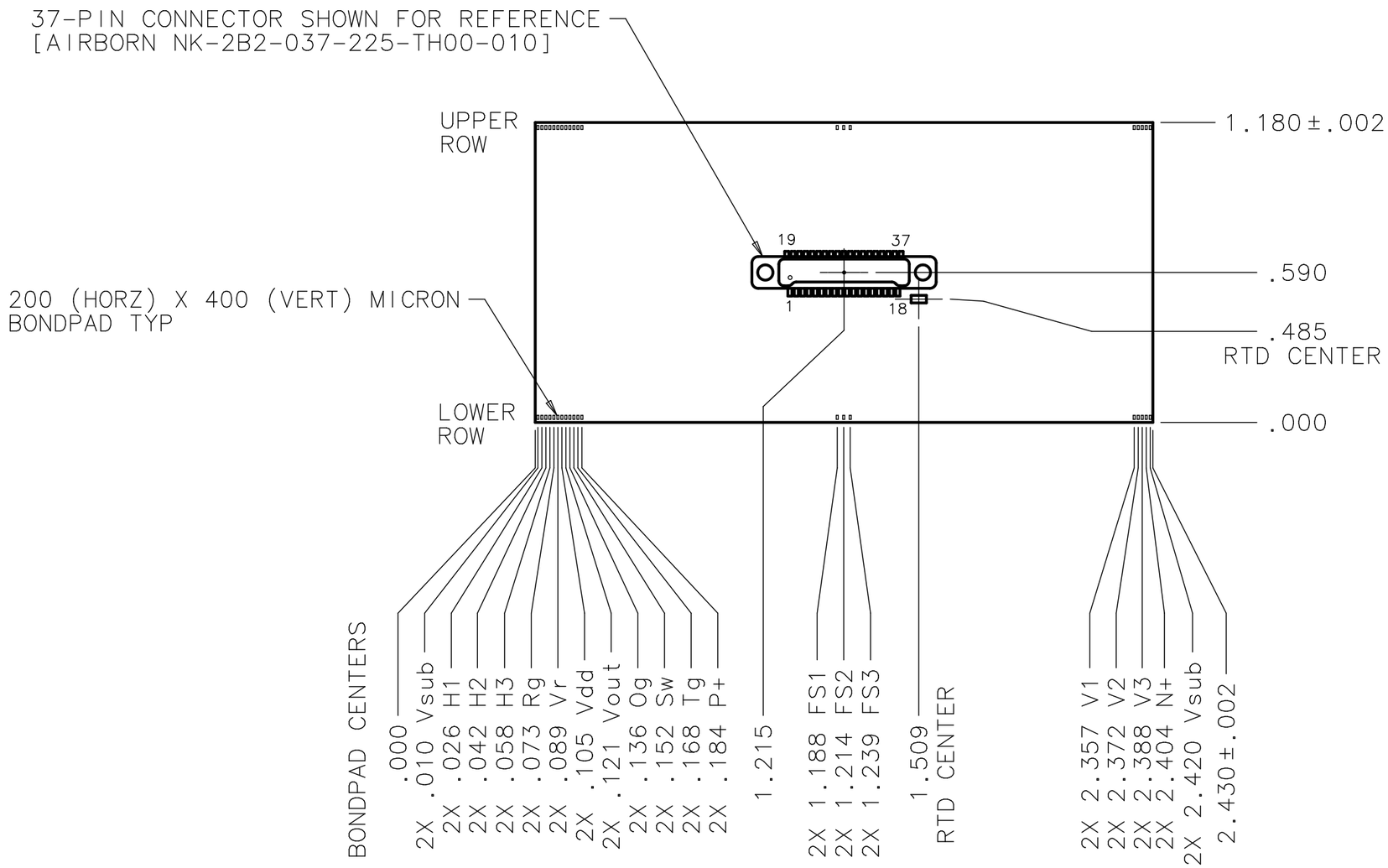

CONNECTOR PIN SIGNAL TABLE

1 - H1L	19 - VSUB
2 - H2L	20 - H1U
3 - H3L	21 - H2U
4 - RgL	22 - H3U
5 - VrL	23 - RgU
6 - VDDL	24 - VrU
7 - VOUTL	25 - VDDU
8 - OgL	26 - VOUTU
9 - SwL	27 - OgU
10 - TGL	28 - SwU
11 - P+	29 - TGU
12 - V1	30 - P+
13 - V2	31 - V1
14 - V3	32 - V2
15 - N+	33 - V3
16 - P+	34 - N+
17 - RTDV+	35 - VSUB
18 - RTDI+	36 - RTDV-
	37 - RTDI-

NOTES

1. PIN NUMBERING IS PROJECT-SPECIFIC AND MAY NOT MATCH THE CONNECTOR VENDOR DATA SHEET.

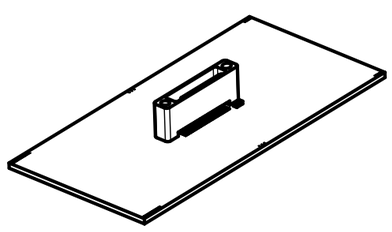

ISOMETRIC VIEW

SCALE 1:1

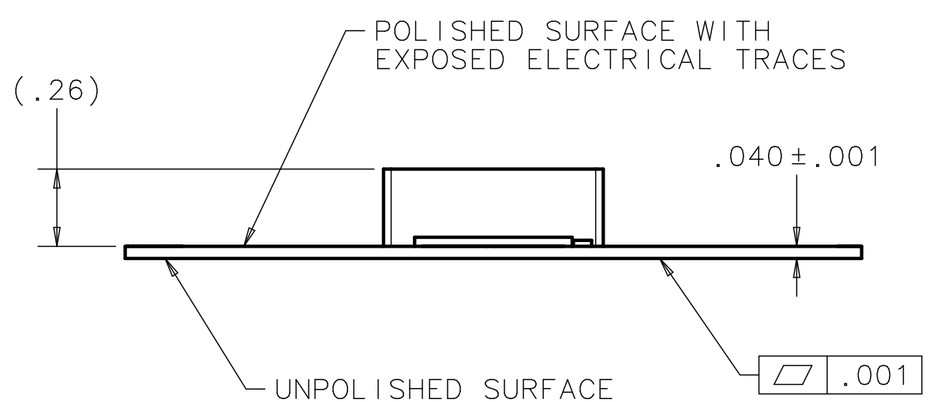

UNLESS OTHERWISE SPECIFIED			ORIGINATOR	B.FLAUGHER	12-SEP-2007
.XX	.XXX	ANGLES	DRAWN	R.L.SMITH	18-SEP-2007
± -	± -	± -	CHECKED	J.SHAW/T.SHAW	03-OCT-2007
1. BREAK ALL SHARP EDGES .01 MAX. 2. DO NOT SCALE DRAWING. 3. DIMENSIONS BASED UPON ASME Y14.5M-1994 4. MAX. ALL MACH. SURFACES 125 5. DRAWING UNITS: U.S. INCH			APPROVED	T.DIEHL	03-OCT-2007
			USED ON	4900.122-MC-436409	
			MATERIAL	ALUMINUM NITRIDE	

FERMI NATIONAL ACCELERATOR LABORATORY
UNITED STATES DEPARTMENT OF ENERGY

CTIO BLANCO DECAM V2.1 2K X 4K CCD MODULE AIN READOUT BOARD

SCALE	DRAWING NUMBER	SHEET	REV
2:1 AS NOTED	4900.122-MB-436410	1 OF 1	

CREATED WITH : Ideas12NXSeries GROUP: PPD/MECHANICAL DEPARTMENT

Created: 08:27:28 on 05-10-07 (D-M-Y) By: derylo State: 1-INITIAL