CCD Interface Board with JFET Buffer

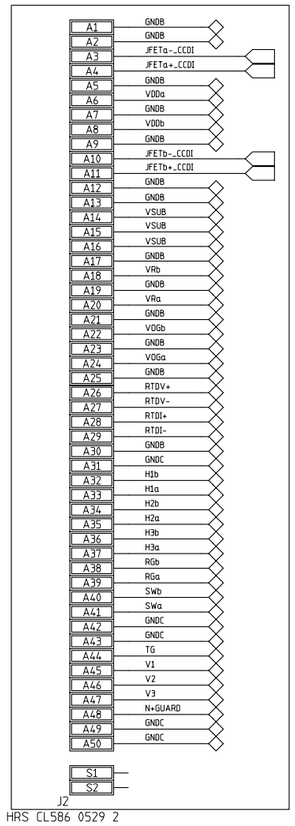

FPC Connector

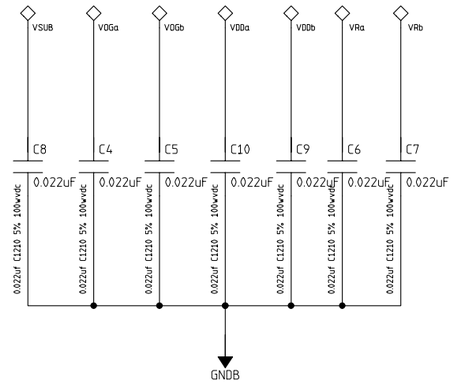

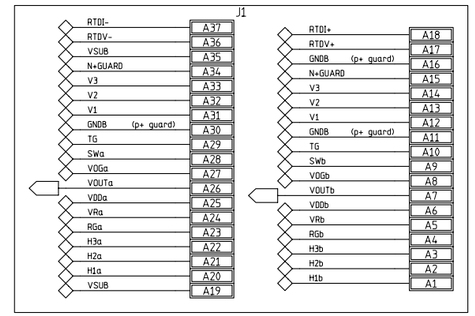

N+guard floats

AMP STM03711378PCQ

Nanonics Connector

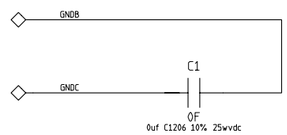

Connection point for returns coming with clocks and biases.

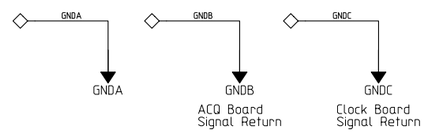

MODFIED 10/4/2007 9:48:15 AM			
EED Department	ORIGINATOR	originator	DATE date
	DRAWN	drawn	DATE date
	CHECKED	checked	DATE date
	APPROVED	approved	DATE date

Fermi National Accelerator Laboratory
United States Department of Energy

D:\AAA_Check\DES_CCD_Interface_v4_MK\DES_CCD_Interface_v4_MK.prj

SIZE	DRAWING NUMBER	REV
D	drawing number (Schematic Page 01 of 02)	A

H:8ND; V:4LA

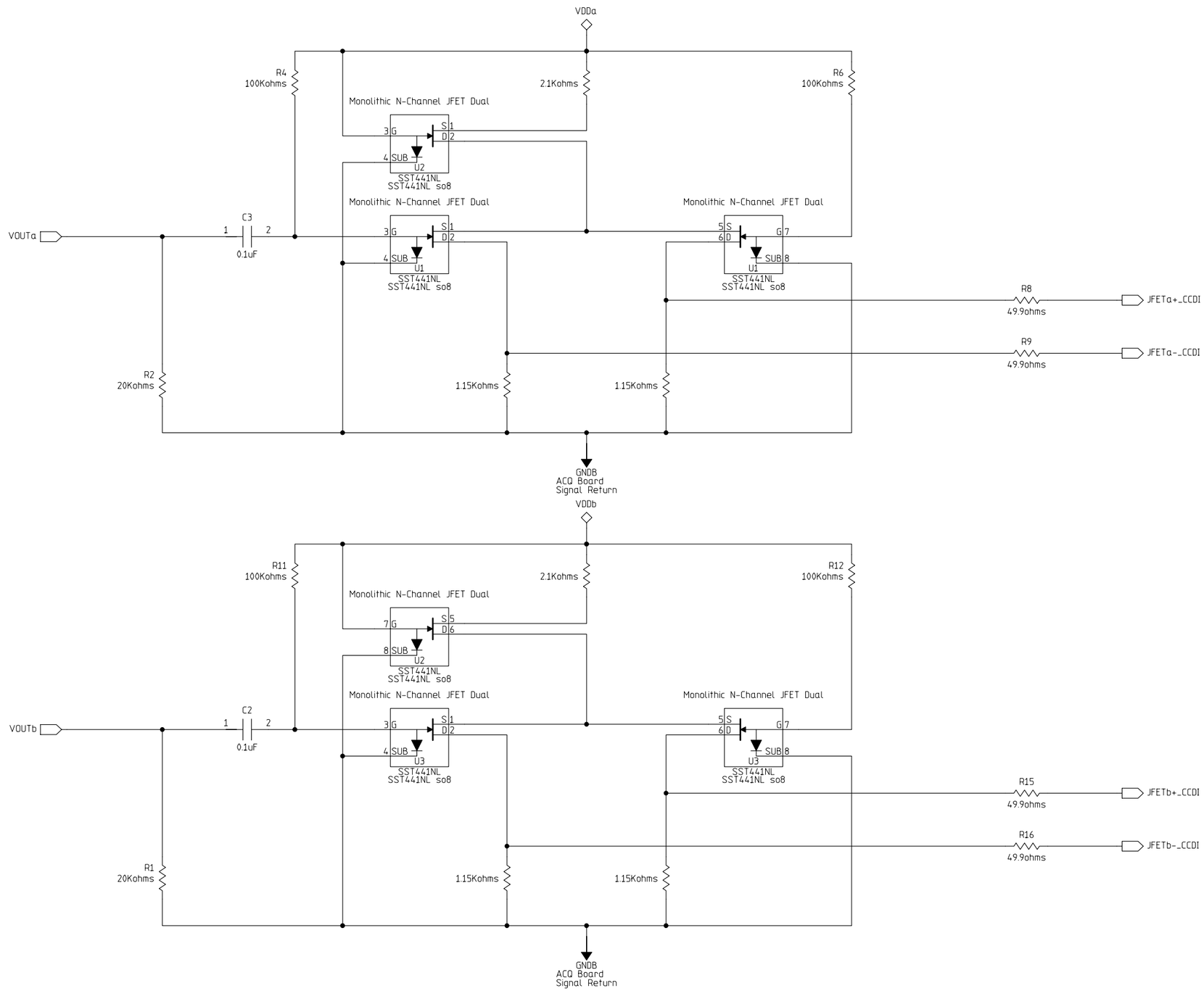

MODFIED 10/4/2007 9:48:15 AM			
EED Department	ORIGINATOR	originator	DATE date
	DRAWN	drawn	DATE date
	CHECKED	checked	DATE date
	APPROVED	approved	DATE date

Fermi National Accelerator Laboratory
United States Department of Energy

D:\AAA_Check\DES_CCD_Interface_v4_MK\DES_CCD_Interface_v4_MK.prj

.

SIZE	DRAWING NUMBER	REV
D	drawing number (Schematic Page 02 of 02)	A

H=8ND; V=4LA