Flex Circuit - for FFC AlN Board

FPC Connector VIB END

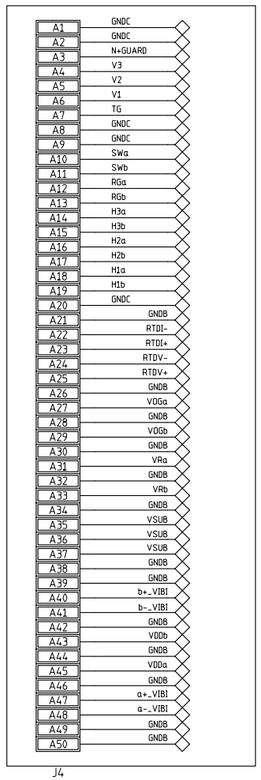

FPC Connector CCD END

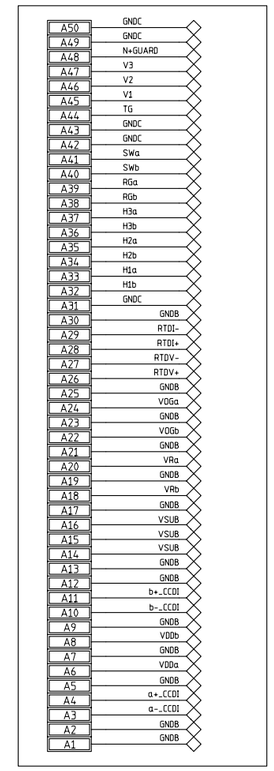

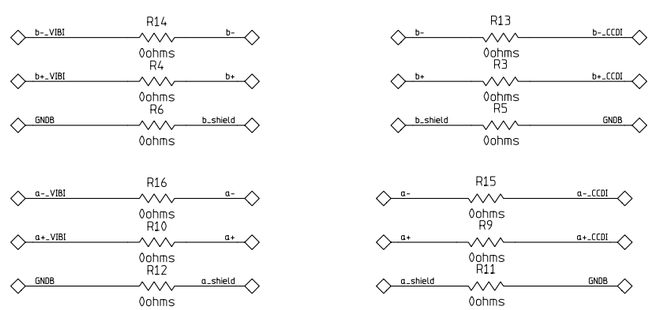

MODIFIED 8/24/2007 2:51:49 PM			
EED Department	ORIGINATOR	originator	DATE date
	DRAWN	drawn	DATE date
	CHECKED	checked	DATE date
	APPROVED	approved	DATE date

Fermi National Accelerator Laboratory
United States Department of Energy

D:\DES_INTERNAL_CABLE\DES_Flex_Circuit_V3\DES_Flex Circuit_V3.prj

.

SIZE	DRAWING NUMBER	REV
D	drawing number (Schematic Page 01 of 01)	A

H=8ND; V=4LA