VIB Interface_v4

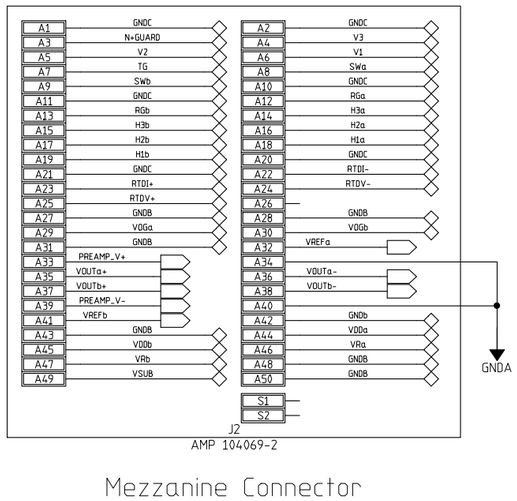

Mezzanine Connector

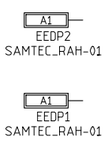

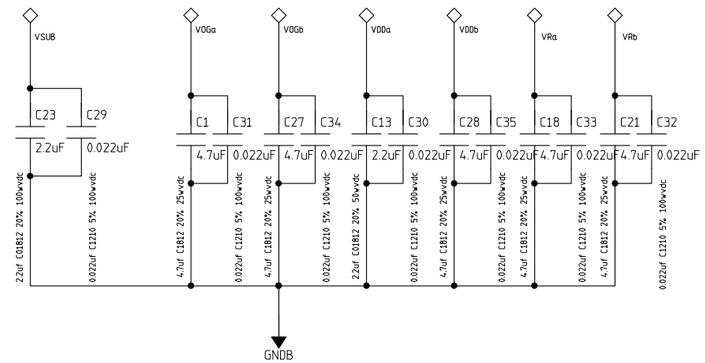

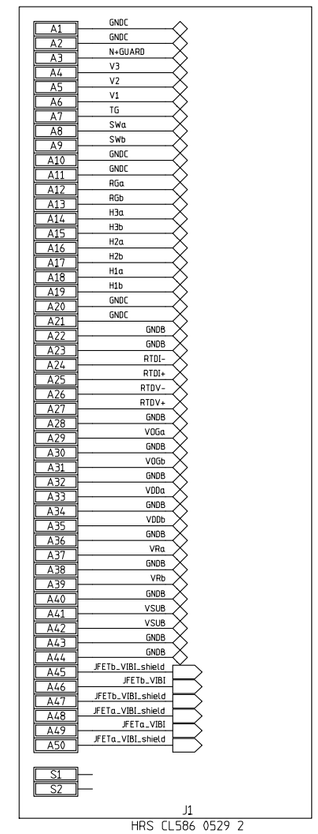

Description:

PC board that acts as a bridge between the
Vacuum Circuit Interface Board and the FPC board

MODIFIED 8/23/2007 10:24:02 AM			
EED Department	ORIGINATOR	originator	DATE date
	DRAWN	drawn	DATE date
	CHECKED	checked	DATE date
	APPROVED	approved	DATE date

Fermi National Accelerator Laboratory
United States Department of Energy

F:\DES_INTERNAL_CABLE\DES_VIBI_V4\DES_VIBI_V4.prj

.

SIZE	DRAWING NUMBER	REV
D	drawing number (Schematic Page 01 of 02)	A

H:8ND; V:4LA

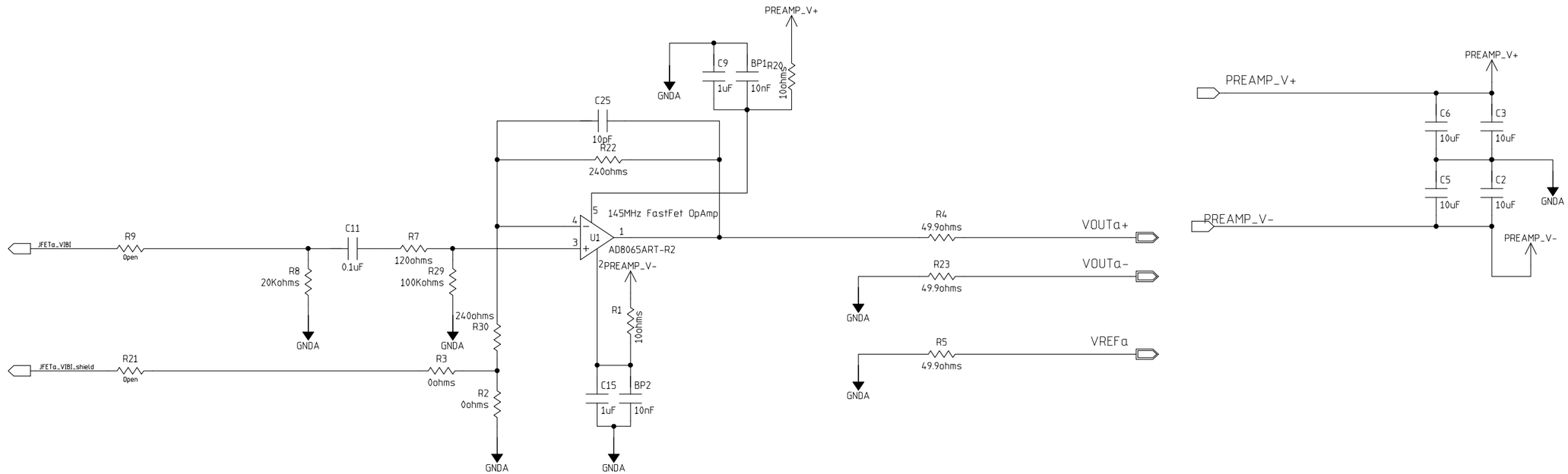

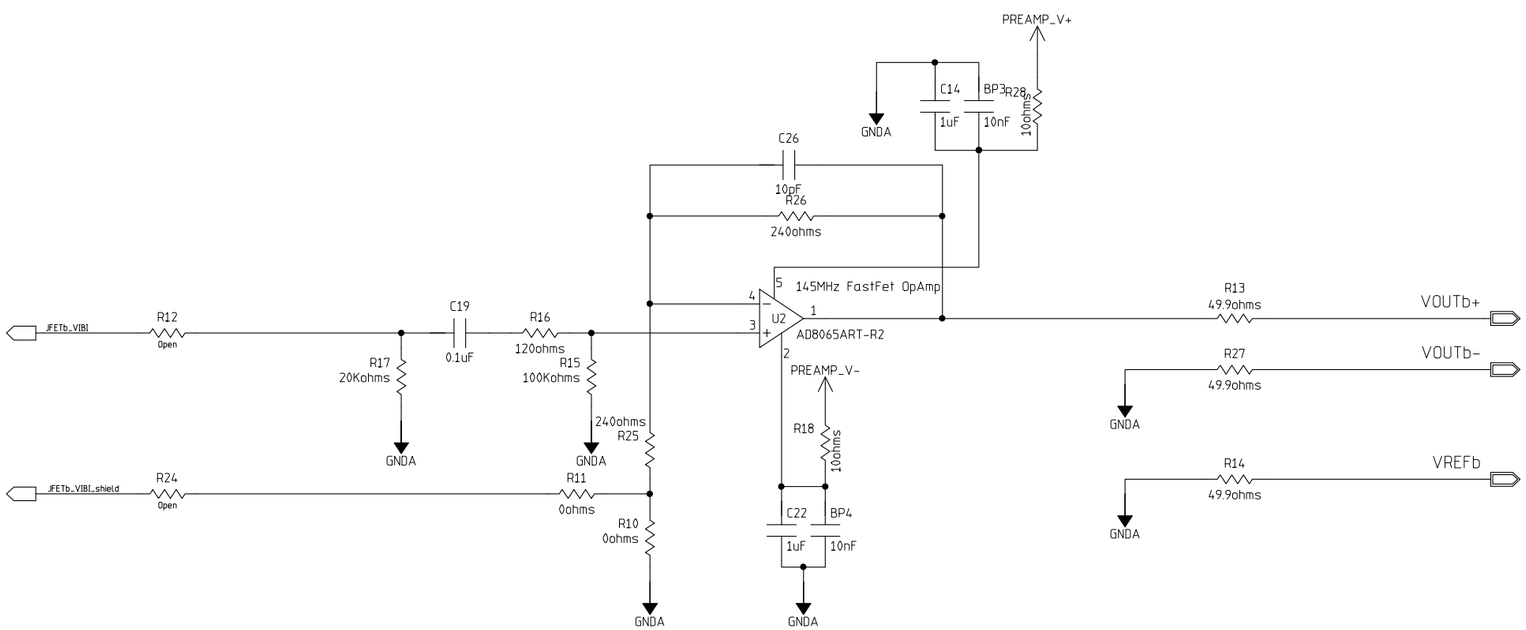

MODFIED 8/23/2007 10:20:08 AM			
EED Department	ORIGINATOR	originator	DATE date
	DRAWN	drawn	DATE date
	CHECKED	checked	DATE date
	APPROVED	approved	DATE date

Fermi National Accelerator Laboratory
United States Department of Energy

F:\DES_INTERNAL_CABLE\DES_VIBI_V4\DES_VIBI_V4.prj

SIZE	DRAWING NUMBER	REV
D	drawing number	A

Schematic Page 02 of 02

H:8ND; V:4LA