REVISIONS					
LTR	DESCRIPTION	ECR	DATE	BY	APPVD
A	SEE ECO DOCUMENT FOR DETAILS	MNSN-0108	11MAY05	DMS	P.MOORE
B	Change value of R and add R to integration stage, other chgs mechanical in nature to layout.	MNSN-0109	14SEP05	DMS	P.MOORE
B1	Add note 5 and sheet cross referencing		12MAY06	DMS	

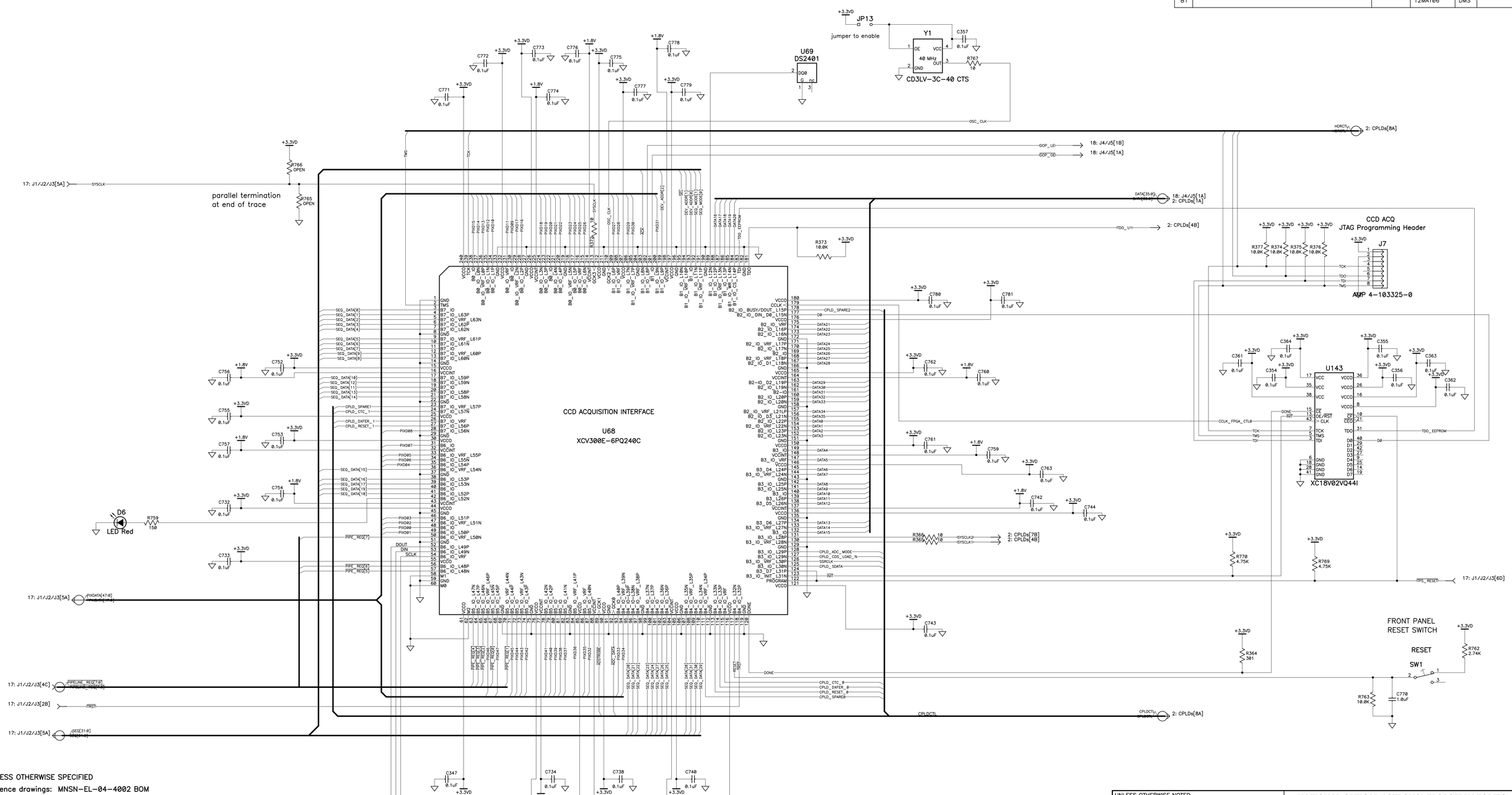

NOTES: UNLESS OTHERWISE SPECIFIED

1) Reference drawings: MNSN-EL-04-4002 BOM
2) Check BOM for full component description, components shall only be crossed with equivalent or improved performance parts.
3) Resistor values are in ohms 1%, 1/10W are better.
4) Capacitance values are in micro farads.
5) Sheet referencing nn: *[n?] nn= sheet #, *=sheet name [n?]= zone on sheet

UNLESS OTHERWISE NOTED
Resistors are in Ohms
Capacitors are in micro Farads uF
Inductors are in micro Henrys uH

DIG GND MGND
AGND EGND

NATIONAL OPTICAL ASTRONOMY OBSERVATORIES
OPERATED BY THE
ASSOCIATION OF UNIVERSITIES FOR RESEARCH IN ASTRONOMY
UNDER COOPERATIVE AGREEMENT WITH
NATIONAL SCIENCE FOUNDATION

DO NOT SCALE DRAWING

NEXT ASSEMBLY: MNSN-EL-04-0002

NAME: SCHEMATIC MONSOON PROJECT CCD 8 CH ACQUISITION BOARD

USED ON

REF

DWG SIZE: D

REV: B1

SCALE:	DESIGNED BY: GRahmer	DATE: 02 Sep 2003	CHECKED BY	DATE	DWG NO: MNSN-EL-04-2002
DWG PRODUCED USING: PCAD 2004	DRAWN BY: GRahmer	DATE	APPROVED BY	DATE	
	PRINT ISSUED	DATE	APPROVED BY	DATE	RELEASED

Sheet 1 of 18

Modified Date:Fri May 12, 2006
Print Date: Fri May 12, 2006

MNSN-EL-04-2002_rB1.sch

(C) copyright NOAO/AURA 2005

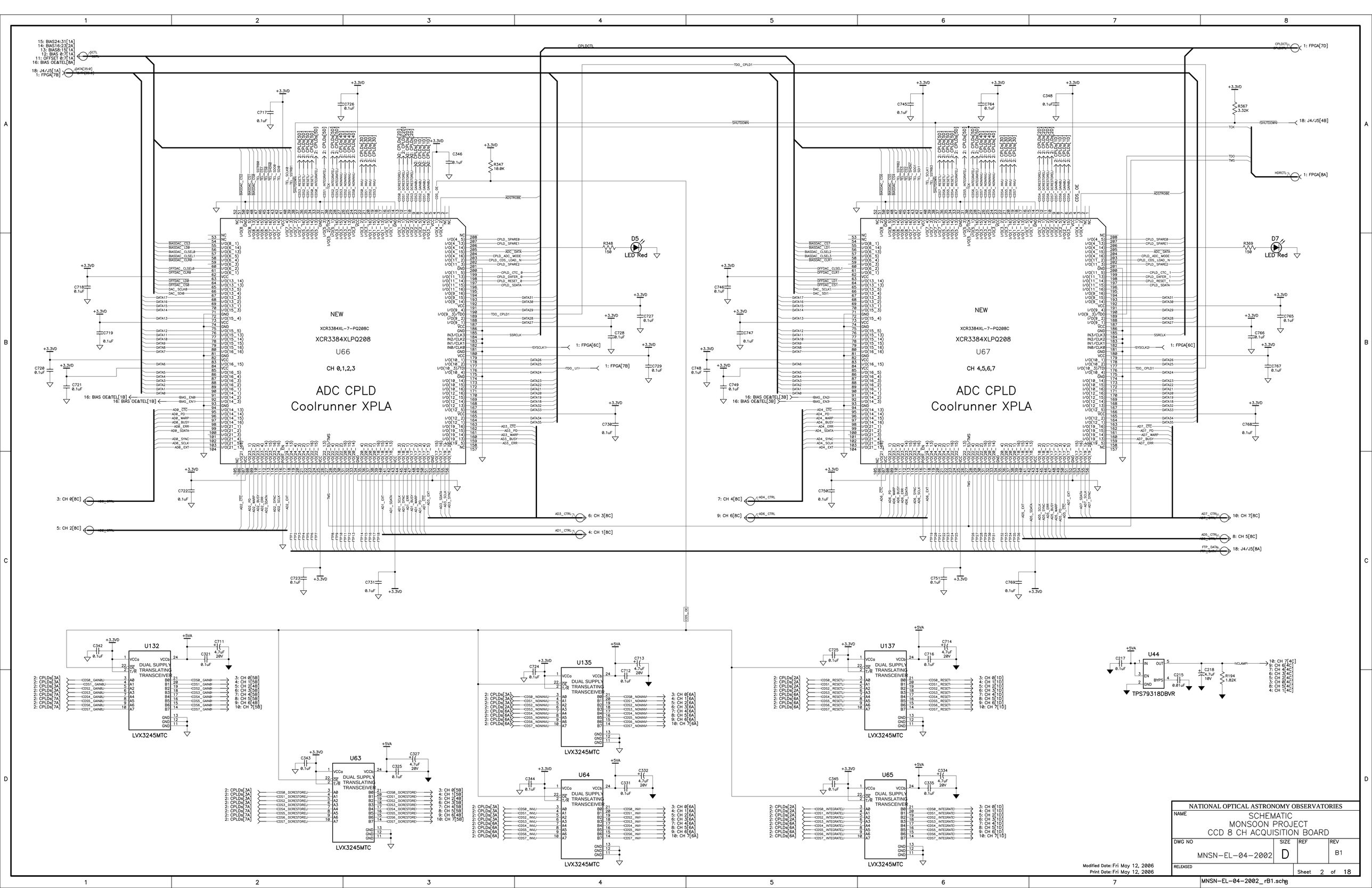

NATIONAL OPTICAL ASTRONOMY OBSERVATORIES

NAME: SCHEMATIC MONSOON PROJECT CCD 8 CH ACQUISITION BOARD

DWG NO	SIZE	REF	REV
MNSN-EL-04-2002	D		B1

RELEASED

Sheet 2 of 18

Modified Date: Fri May 12, 2006
Print Date: Fri May 12, 2006

MNSN-EL-04-2002_rB1.sch

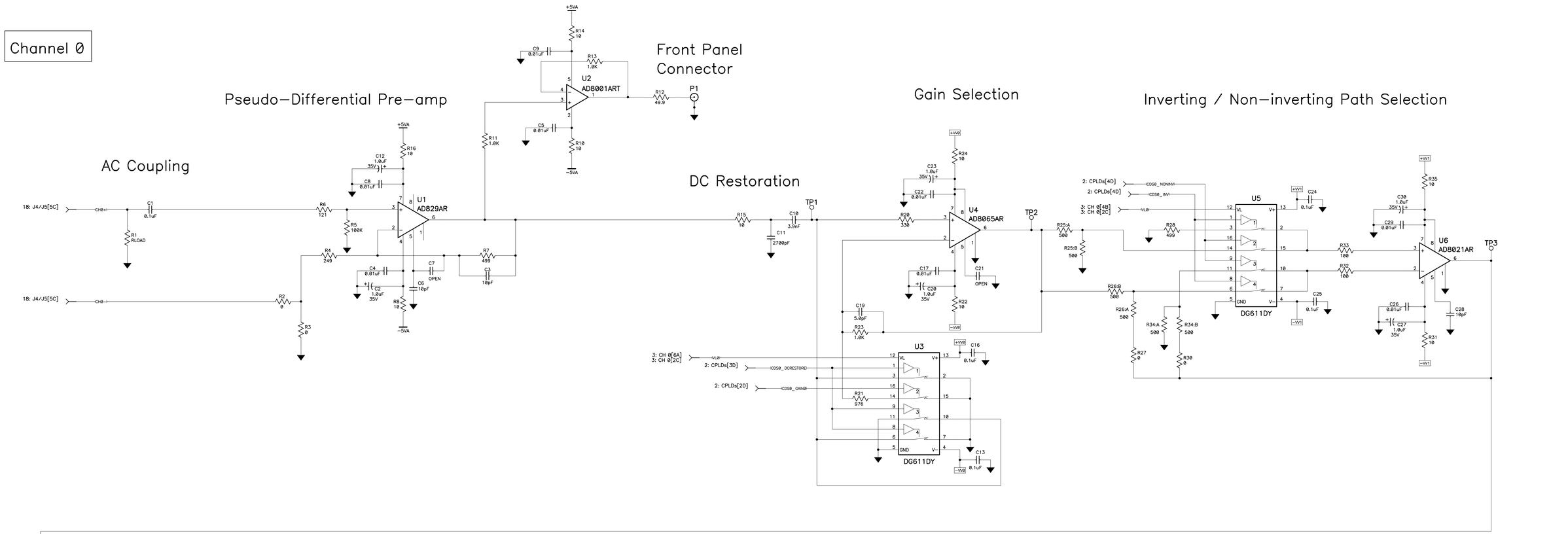

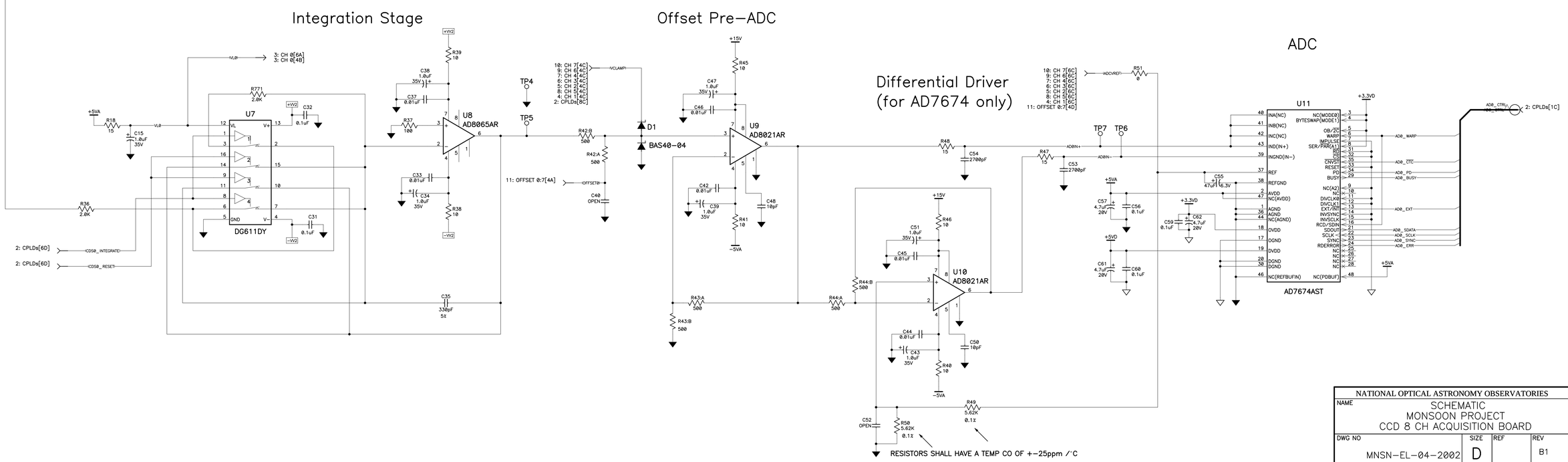

NATIONAL OPTICAL ASTRONOMY OBSERVATORIES			
NAME SCHEMATIC MONSOON PROJECT CCD 8 CH ACQUISITION BOARD			
DWG NO MNSN-EL-04-2002	SIZE D	REF	REV B1
RELEASED		Sheet 3 of 18	

Modified Date: Fri May 12, 2006
Print Date: Fri May 12, 2006

MNSN-EL-04-2002_rB1.sch

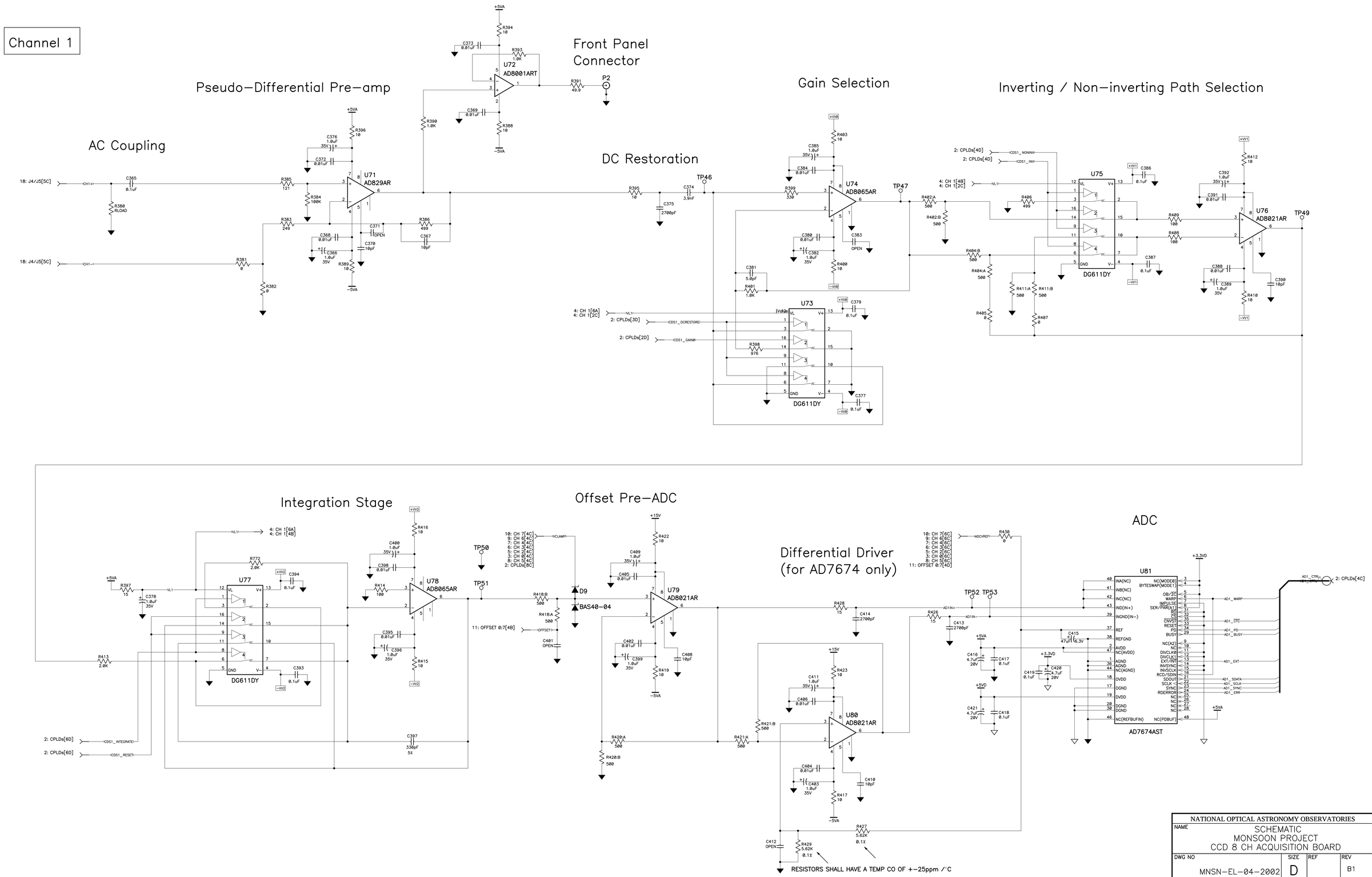
Channel 1
AC Coupling
Pseudo-Differential Pre-amp
Front Panel Connector
Gain Selection
Inverting / Non-inverting Path Selection
DC Restoration
Integration Stage
Offset Pre-ADC
Differential Driver (for AD7674 only)
ADC
U71 AD829AR
U72 AD8001ART
U73 DG611DY
U74 AD8065AR
U75 DG611DY
U76 AD8021AR
U77 DG611DY
U78 AD8065AR
U79 AD8021AR
U80 AD8021AR
U81 AD7674AST
P2
TP46
TP47
TP49
TP50
TP51
TP52
TP53
D9 BAS40-04
RESISTORS SHALL HAVE A TEMP CO OF +-25ppm /°C
NATIONAL OPTICAL ASTRONOMY OBSERVATORIES
NAME
SCHEMATIC
MONSOON PROJECT
CCD 8 CH ACQUISITION BOARD
DWG NO
MNSN-EL-04-2002
SIZE
D
REF
REV
B1
RELEASED
Sheet 4 of 18
Modified Date: Fri May 12, 2006
Print Date: Fri May 12, 2006
MNSN-EL-04-2002_rB1.sch

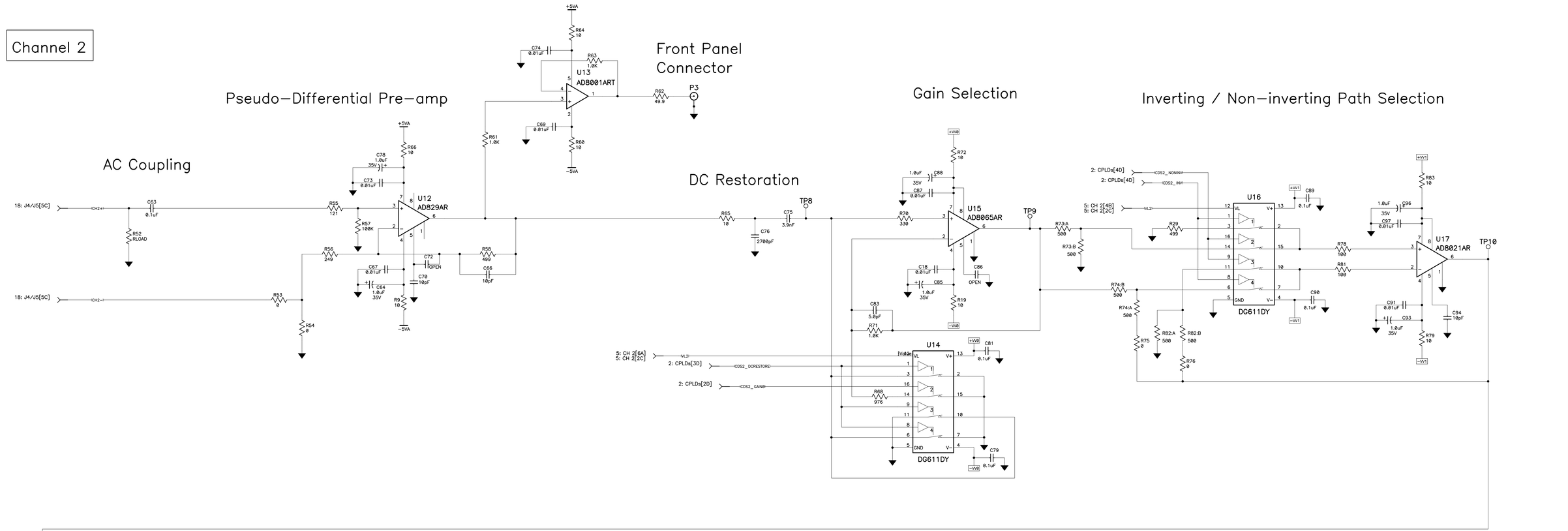

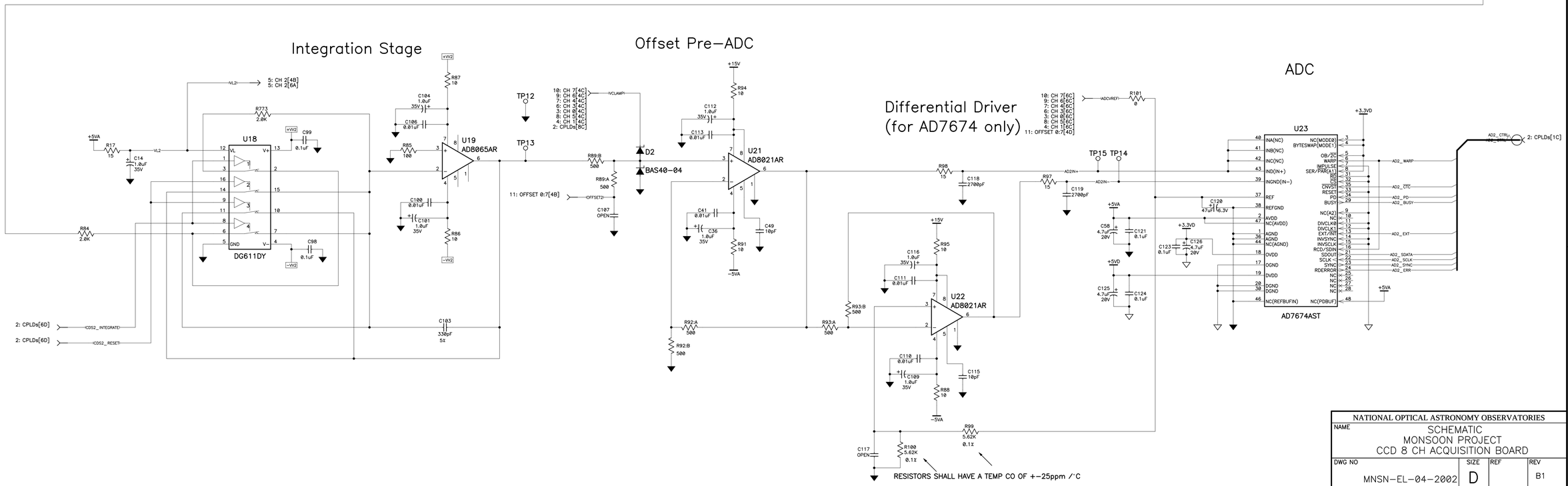

NATIONAL OPTICAL ASTRONOMY OBSERVATORIES

NAME: SCHEMATIC MONSOON PROJECT CCD 8 CH ACQUISITION BOARD

DWG NO	SIZE	REF	REV
MNSN-EL-04-2002	D		B1

RELEASED

Sheet 5 of 18

Modified Date: Fri May 12, 2006
Print Date: Fri May 12, 2006

MNSN-EL-04-2002_rB1.sch

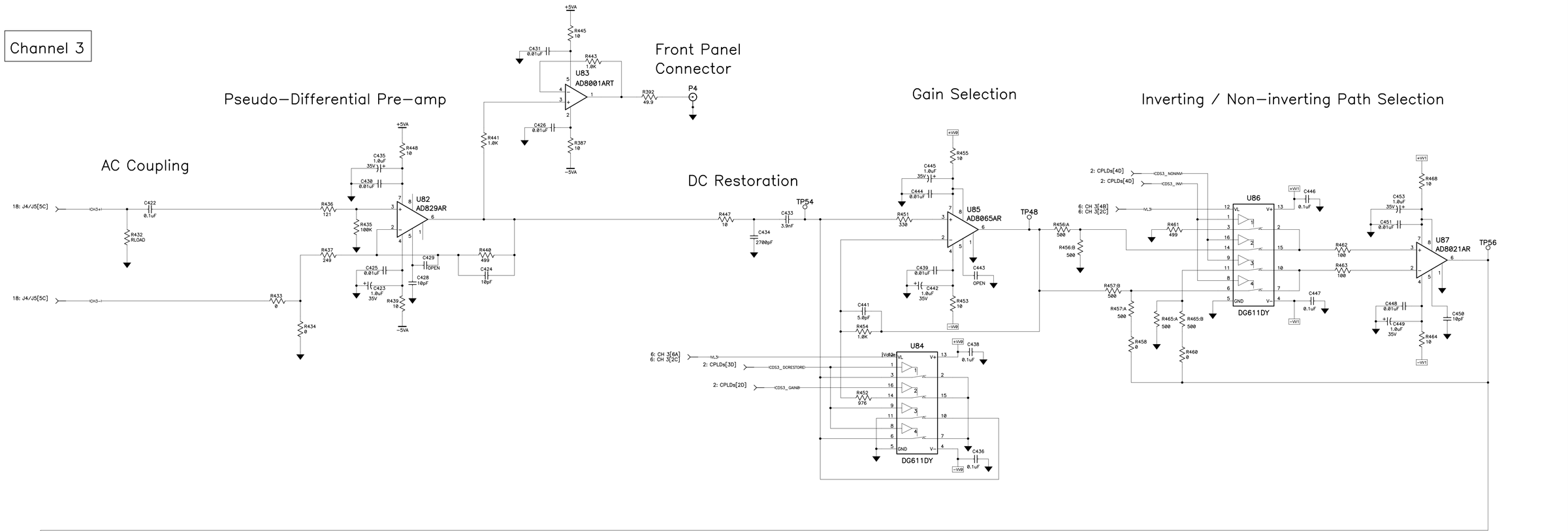

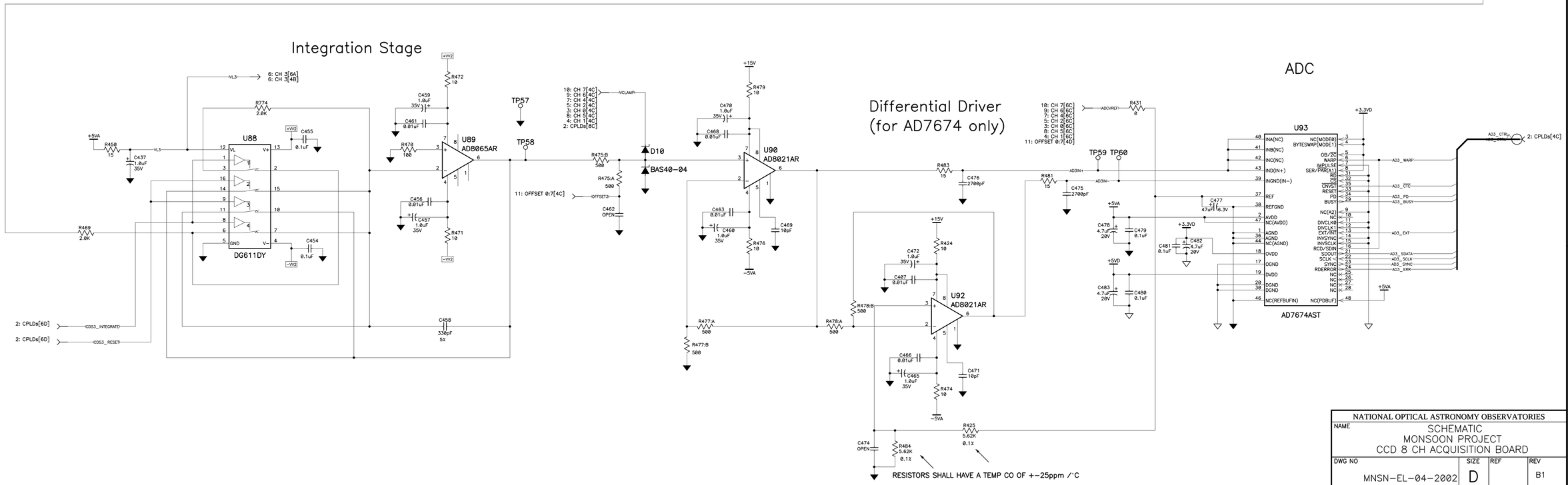

NATIONAL OPTICAL ASTRONOMY OBSERVATORIES			
NAME: SCHEMATIC MONSOON PROJECT CCD 8 CH ACQUISITION BOARD			
DWG NO: MNSN-EL-04-2002	SIZE: D	REF	REV: B1
RELEASED		Sheet 6 of 18	

Modified Date: Fri May 12, 2006
Print Date: Fri May 12, 2006

MNSN-EL-04-2002_rB1.sch

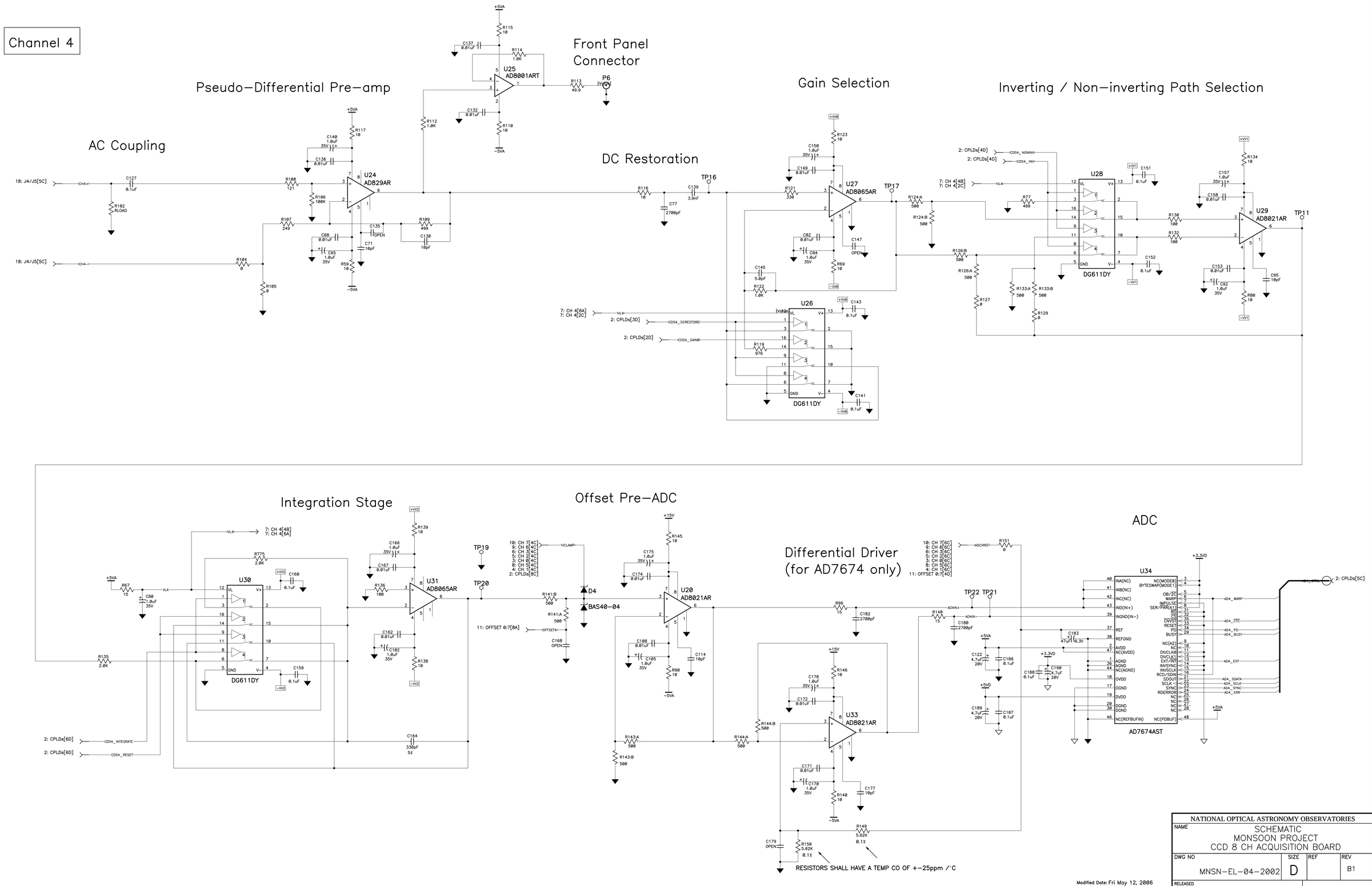
Channel 4
Pseudo-Differential Pre-amp
Front Panel Connector
Gain Selection
Inverting / Non-inverting Path Selection
AC Coupling
DC Restoration
Integration Stage
Offset Pre-ADC
Differential Driver (for AD7674 only)
ADC
U24 AD829AR
U25 AD8001ART
U27 AD8065AR
U26 DG611DY
U28 DG611DY
U29 AD8021AR
U30 DG611DY
U31 AD8065AR
U20 AD8021AR
U33 AD8021AR
U34 AD7674AST
D4 BAS40-04
P6
TP16
TP17
TP11
TP19
TP20
TP22
TP21
RESISTORS SHALL HAVE A TEMP CO OF +-25ppm /°C
NATIONAL OPTICAL ASTRONOMY OBSERVATORIES
NAME
SCHEMATIC
MONSOON PROJECT
CCD 8 CH ACQUISITION BOARD
DWG NO
MNSN-EL-04-2002
SIZE
D
REF
REV
B1
RELEASED
Sheet 7 of 18
Modified Date: Fri May 12, 2006
Print Date: Fri May 12, 2006
MNSN-EL-04-2002_rB1.sch

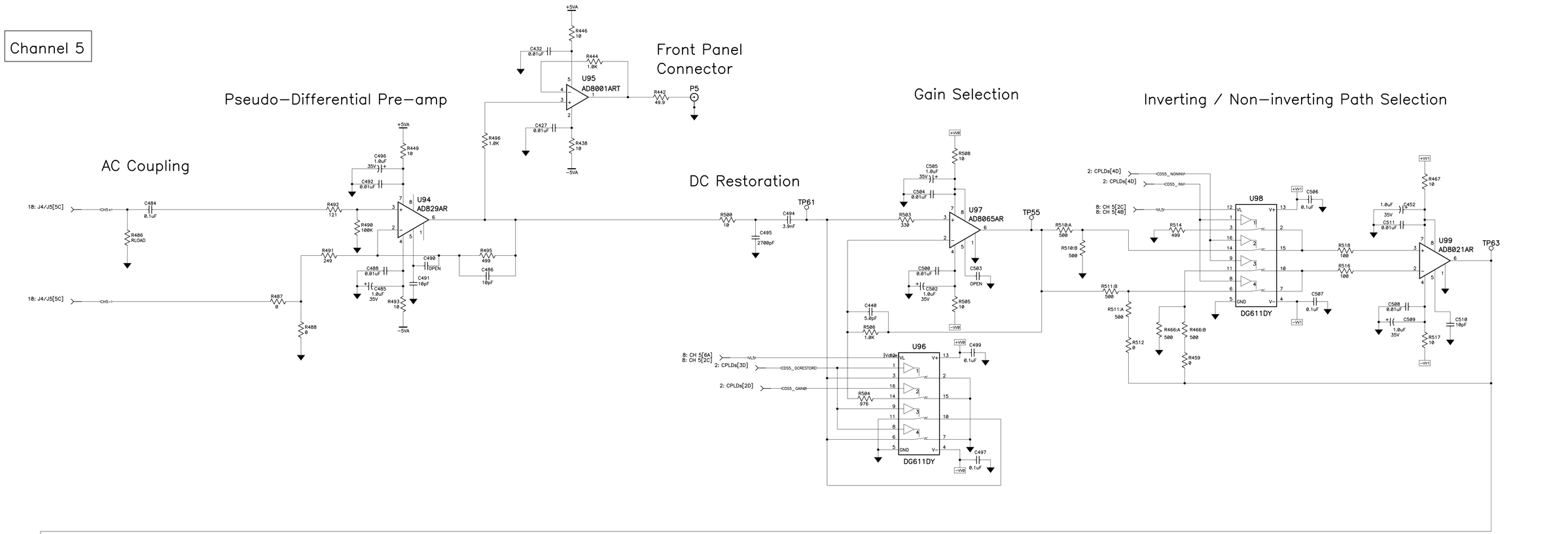

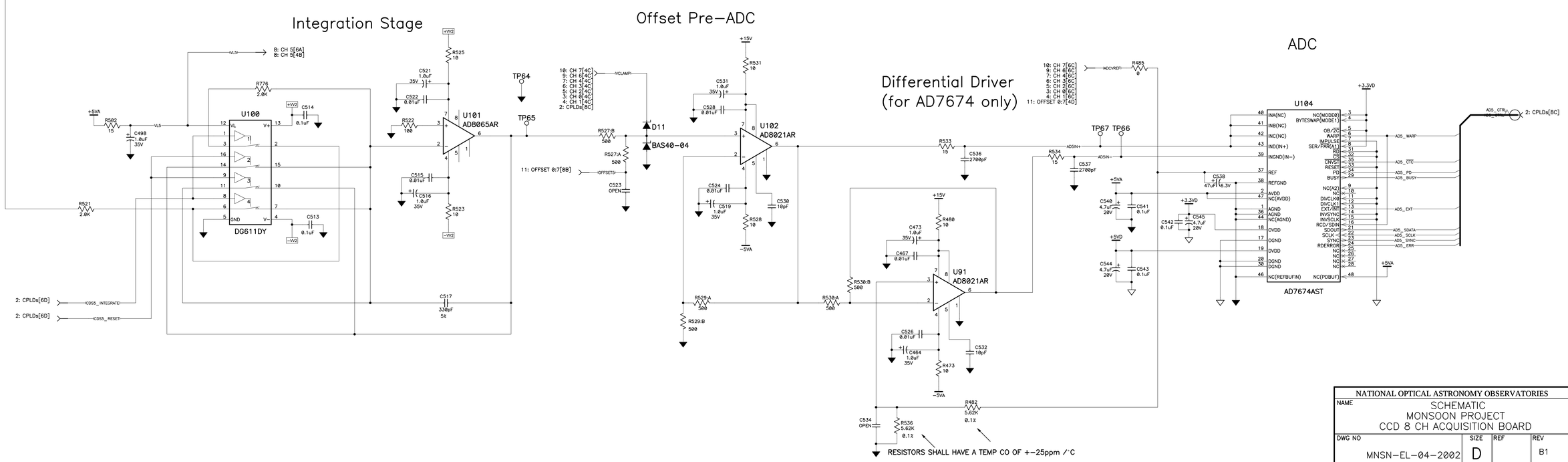

NATIONAL OPTICAL ASTRONOMY OBSERVATORIES

NAME: SCHEMATIC MONSOON PROJECT CCD 8 CH ACQUISITION BOARD

DWG NO	SIZE	REF	REV
MNSN-EL-04-2002	D		B1

RELEASED

Sheet 8 of 18

Modified Date: Fri May 12, 2006
Print Date: Fri May 12, 2006

MNSN-EL-04-2002_rB1.sch8

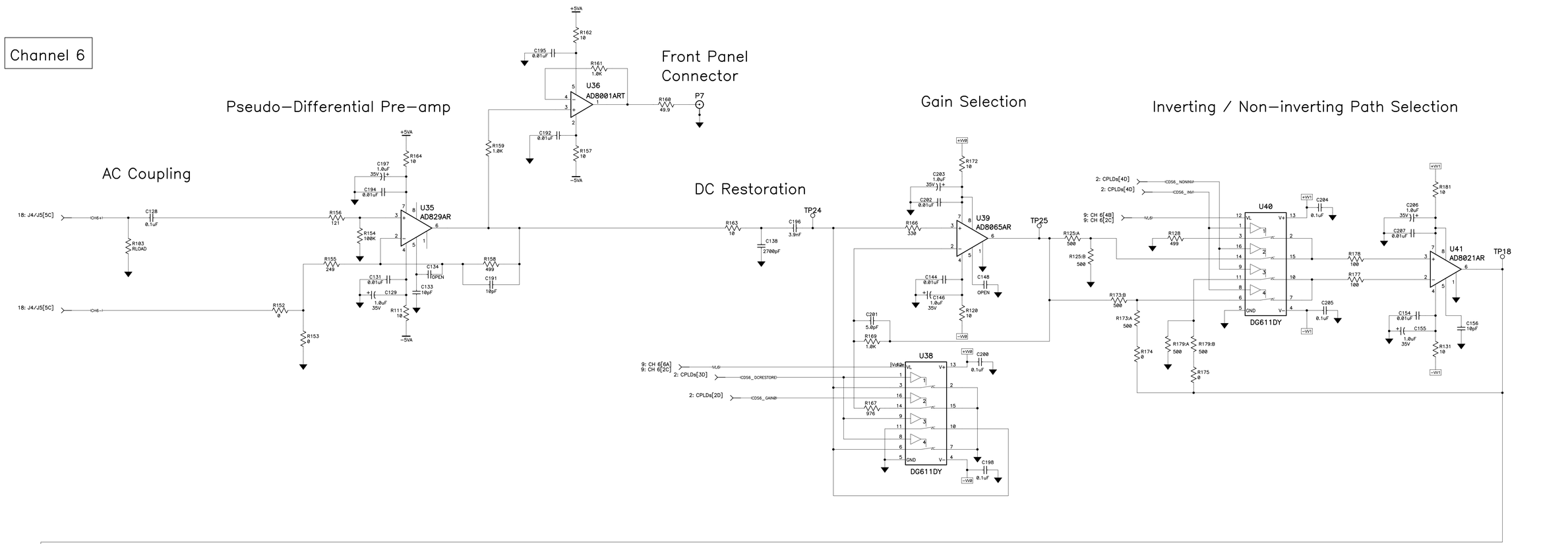

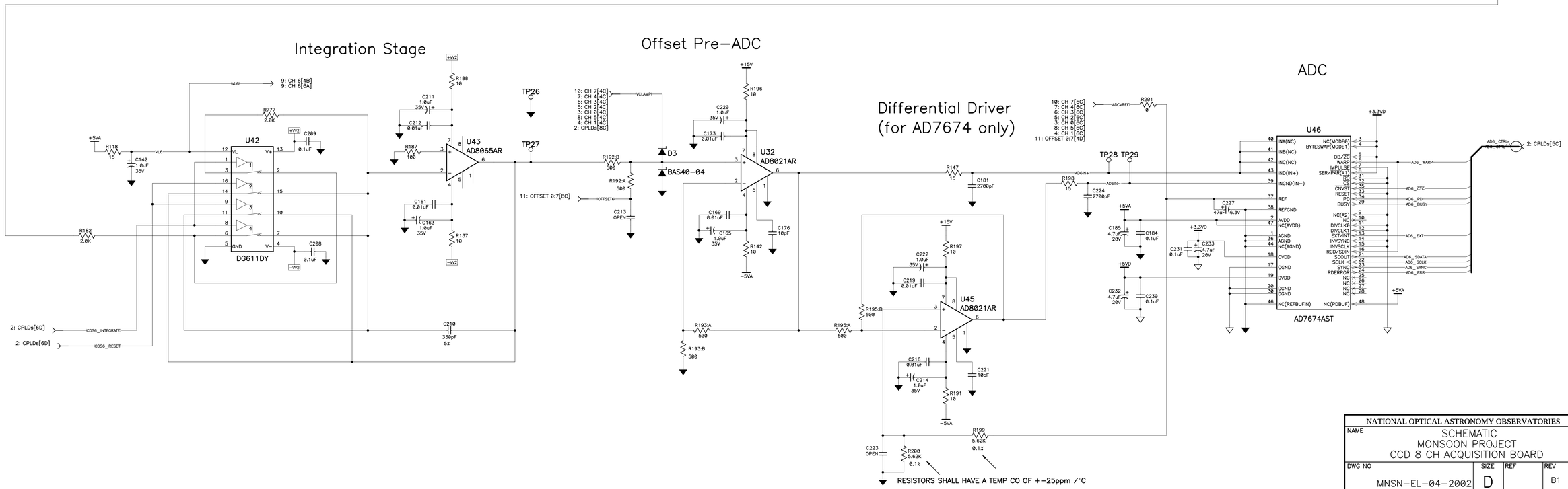

NATIONAL OPTICAL ASTRONOMY OBSERVATORIES

NAME: SCHEMATIC MONSOON PROJECT CCD 8 CH ACQUISITION BOARD

DWG NO	SIZE	REF	REV
MNSN-EL-04-2002	D		B1

RELEASED

Sheet 9 of 18

Modified Date: Fri May 12, 2006
Print Date: Fri May 12, 2006

MNSN-EL-04-2002_rB1.sch

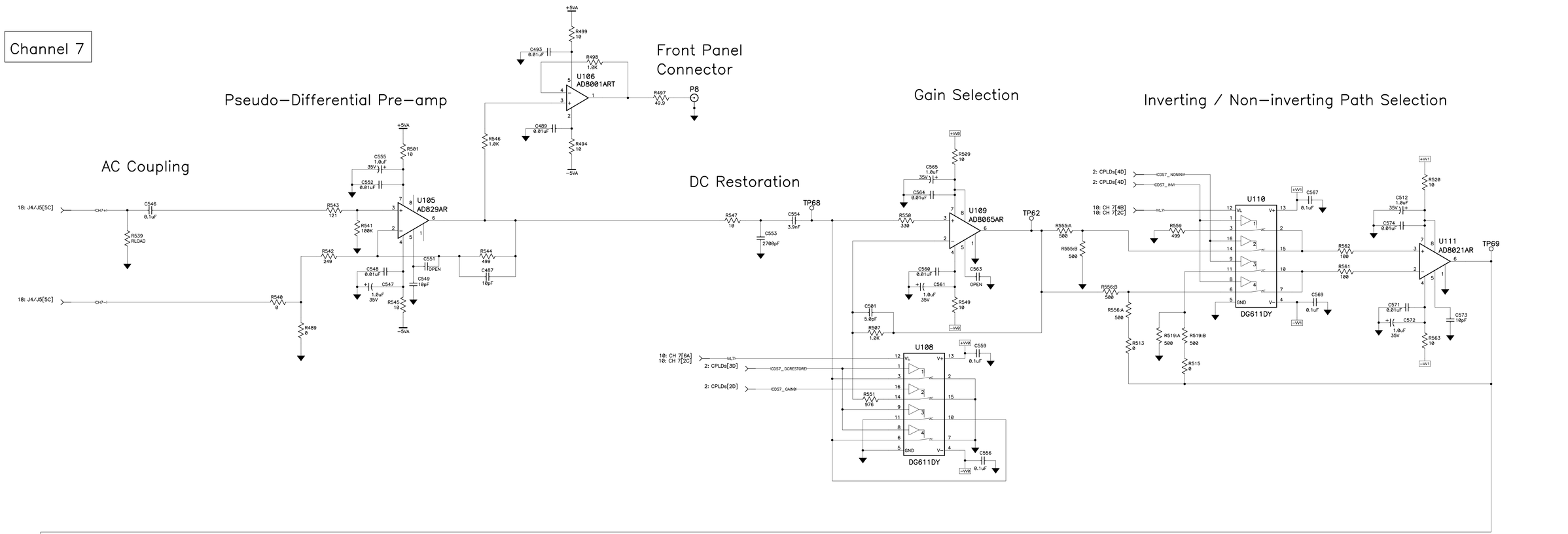

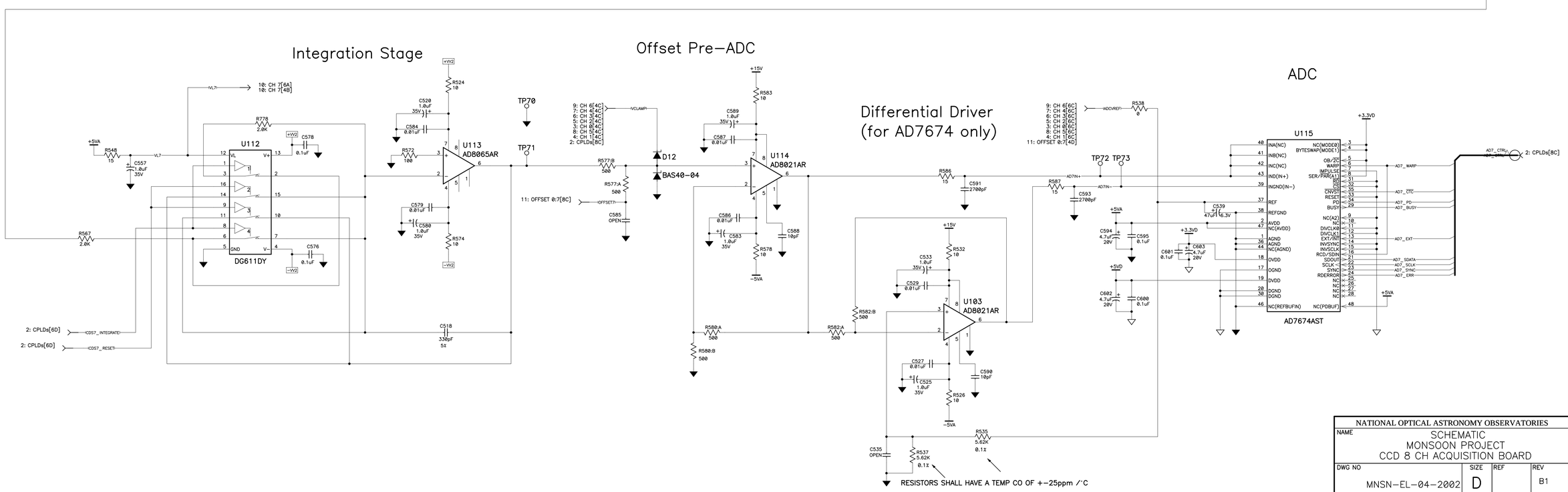

NATIONAL OPTICAL ASTRONOMY OBSERVATORIES			
NAME: SCHEMATIC MONSOON PROJECT CCD 8 CH ACQUISITION BOARD			
DWG NO: MNSN-EL-04-2002	SIZE: D	REF	REV: B1
RELEASED			Sheet 10 of 18

Modified Date: Fri May 12, 2006
Print Date: Fri May 12, 2006

MNSN-EL-04-2002_rB1.sch8

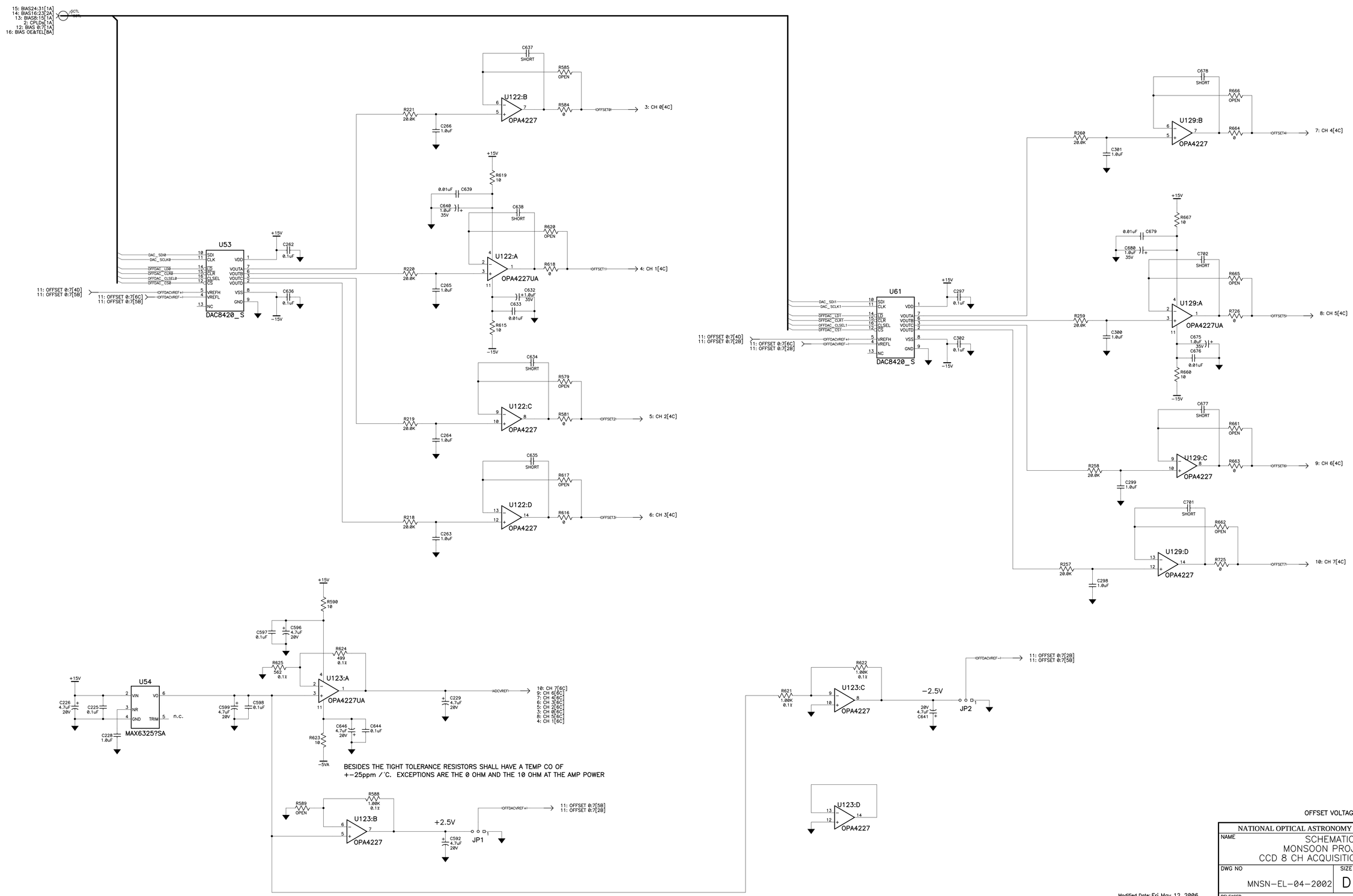

OFFSET VOLTAGES 0-7

NATIONAL OPTICAL ASTRONOMY OBSERVATORIES			
NAME	SCHEMATIC MONSOON PROJECT CCD 8 CH ACQUISITION BOARD		
DWG NO MNSN-EL-04-2002	SIZE D	REF	REV B1
RELEASED			Sheet 11 of 18

Modified Date: Fri May 12, 2006
Print Date: Fri May 12, 2006

MNSN-EL-04-2002_rB1.sch

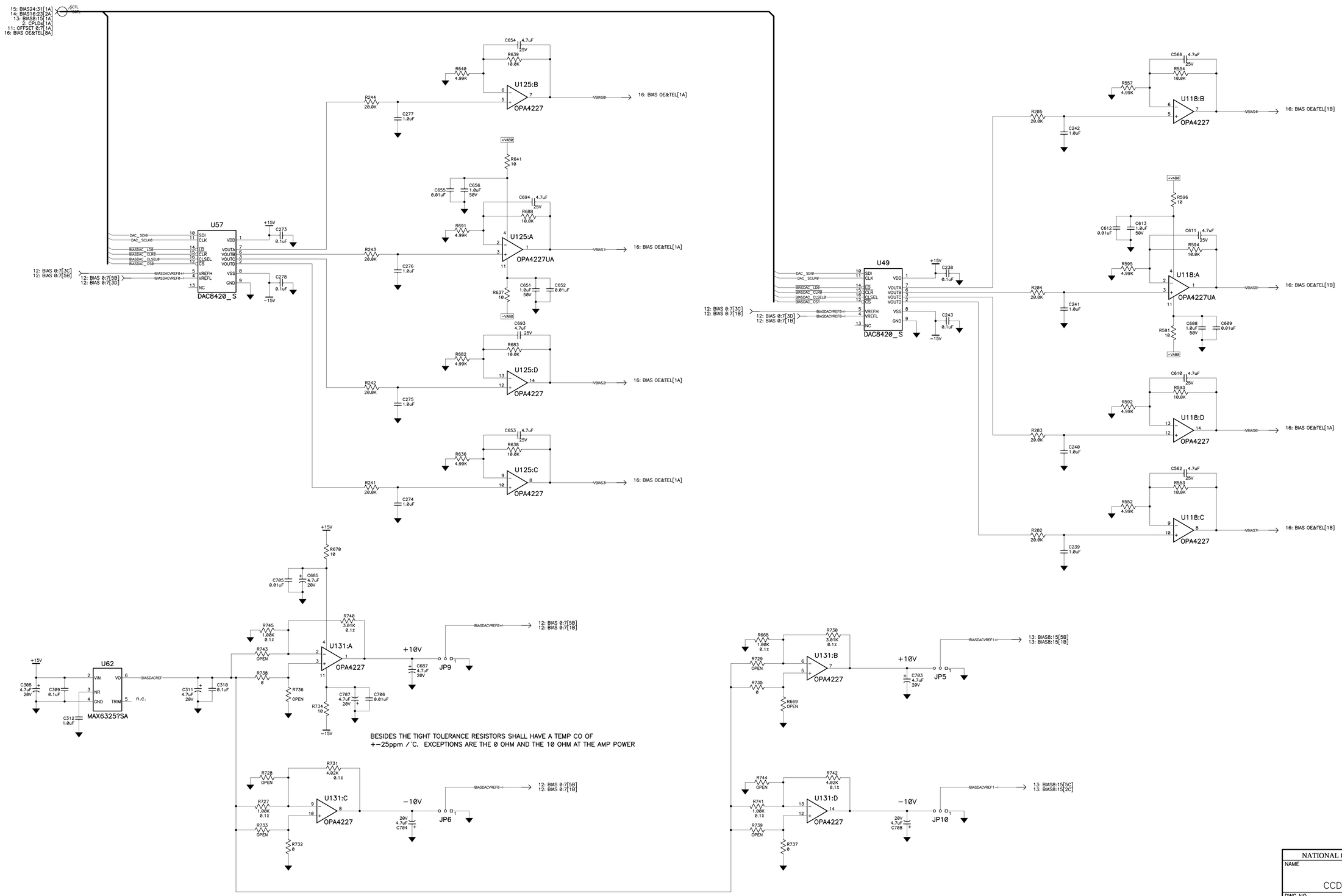

BIAS VOLTAGES 0:7

NATIONAL OPTICAL ASTRONOMY OBSERVATORIES

NAME: SCHEMATIC
MONSOON PROJECT
CCD 8 CH ACQUISITION BOARD

DWG NO	SIZE	REF	REV
MNSN−EL−04−2002	D		B1

RELEASED

Sheet 12 of 18

Modified Date: Fri May 12, 2006
Print Date: Fri May 12, 2006

MNSN−EL−04−2002_rB1.sch

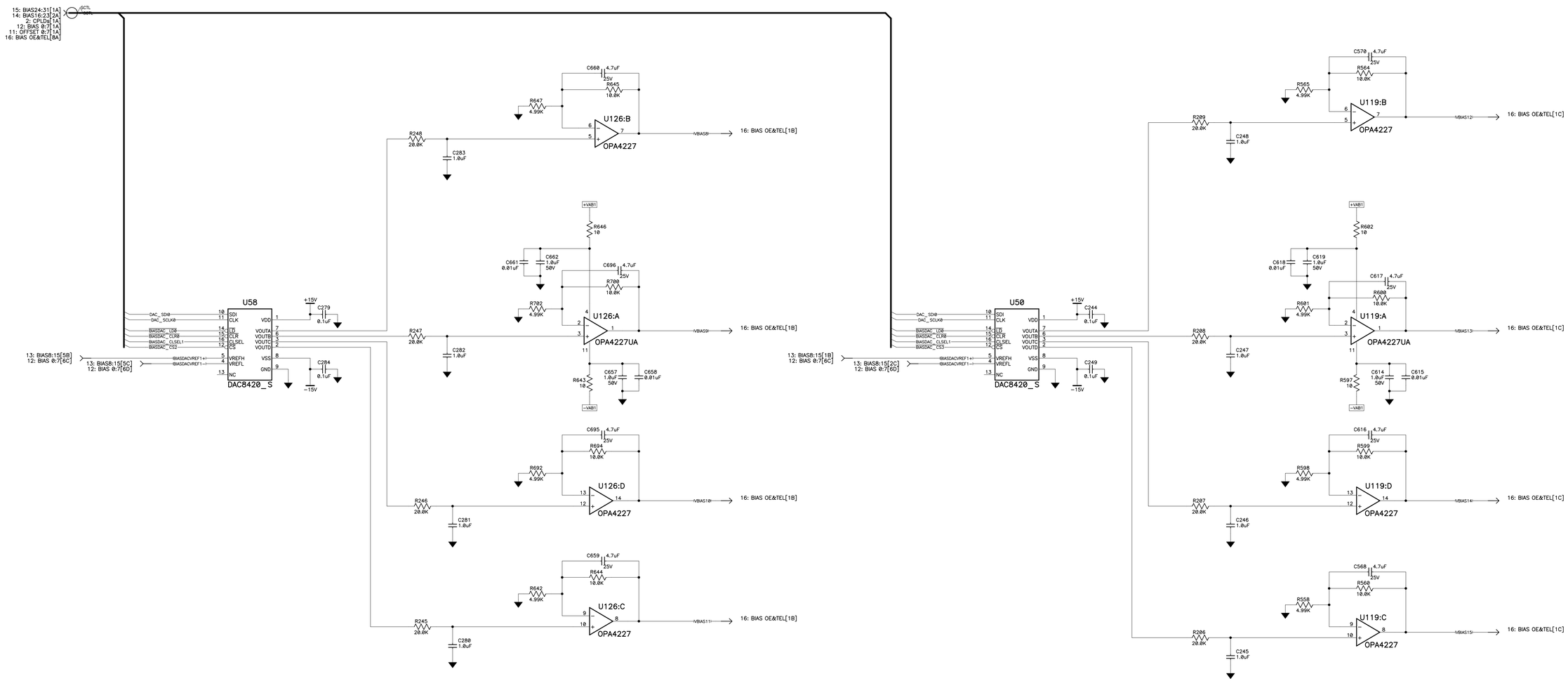

BIAS VOLTAGES 8:15

NATIONAL OPTICAL ASTRONOMY OBSERVATORIES			
NAME SCHEMATIC MONSOON PROJECT CCD 8 CH ACQUISITION BOARD			
DWG NO MNSN-EL-04-2002	SIZE D	REF	REV B1
RELEASED		Sheet 13 of 18	

Modified Date: Fri May 12, 2006
Print Date: Fri May 12, 2006

MNSN-EL-04-2002_rB1.sch

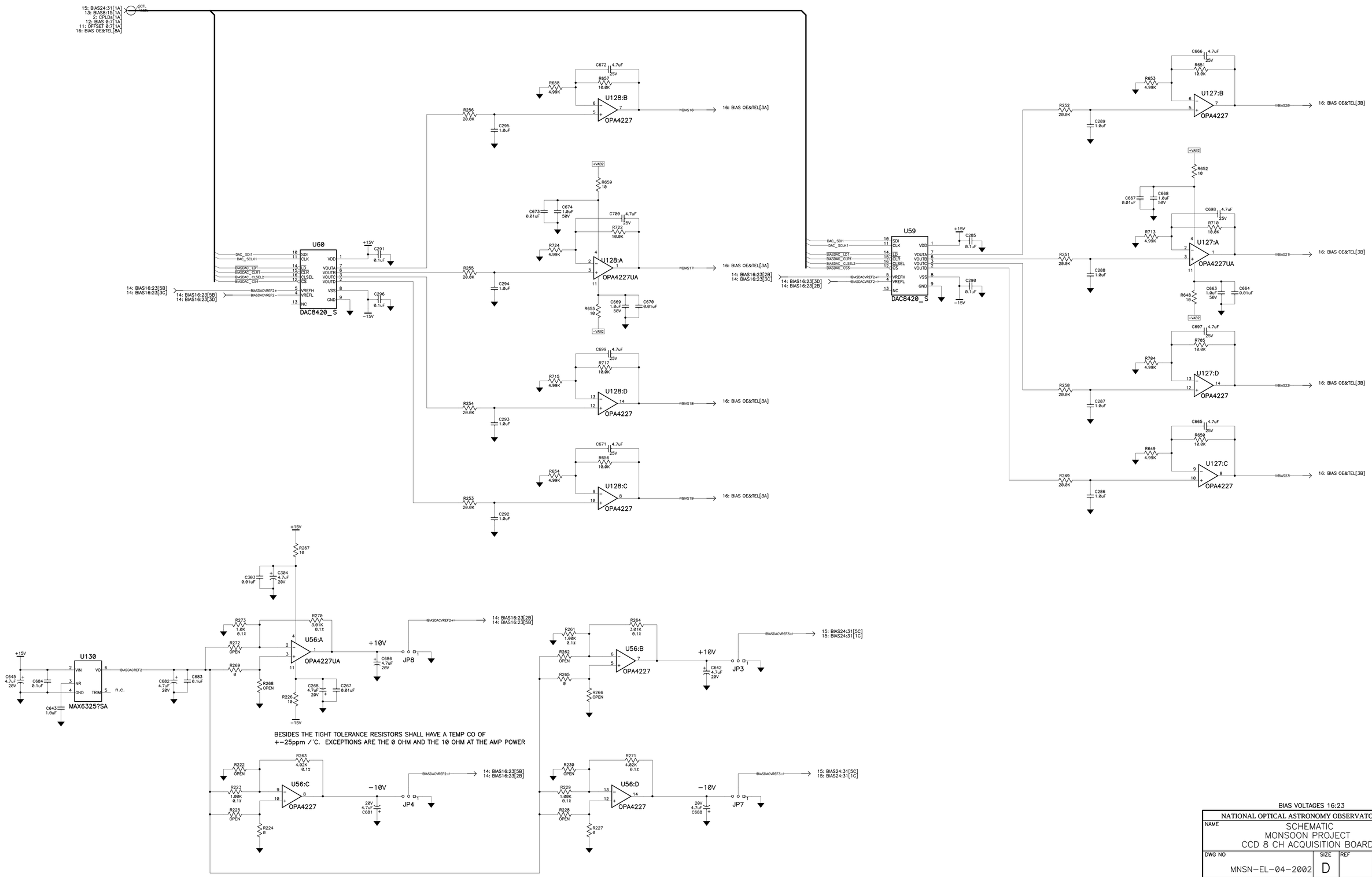

BIAS VOLTAGES 16:23

NATIONAL OPTICAL ASTRONOMY OBSERVATORIES			
NAME	SCHEMATIC MONSOON PROJECT CCD 8 CH ACQUISITION BOARD		
DWG NO	SIZE	REF	REV
MNSN−EL−04−2002	D		B1
RELEASED		Sheet 14 of 18	

Modified Date: Fri May 12, 2006
Print Date: Fri May 12, 2006

MNSN−EL−04−2002_rB1.sch

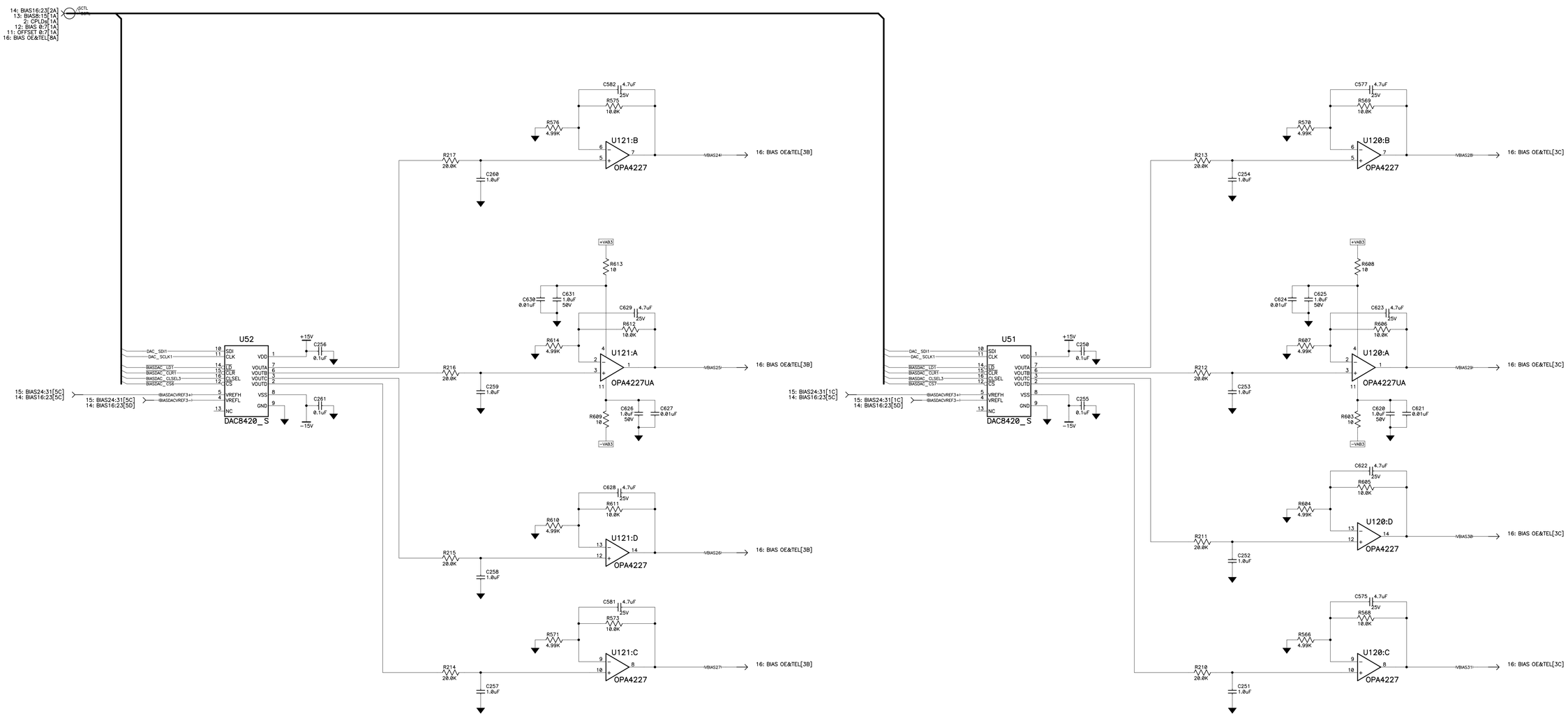

BIAS VOLTAGES 24:31

NATIONAL OPTICAL ASTRONOMY OBSERVATORIES			
NAME SCHEMATIC MONSOON PROJECT CCD 8 CH ACQUISITION BOARD			
DWG NO MNSN-EL-04-2002	SIZE D	REF	REV B1
RELEASED		Sheet 15 of 18	

Modified Date: Fri May 12, 2006
Print Date: Fri May 12, 2006

MNSN-EL-04-2002_rB1.sch

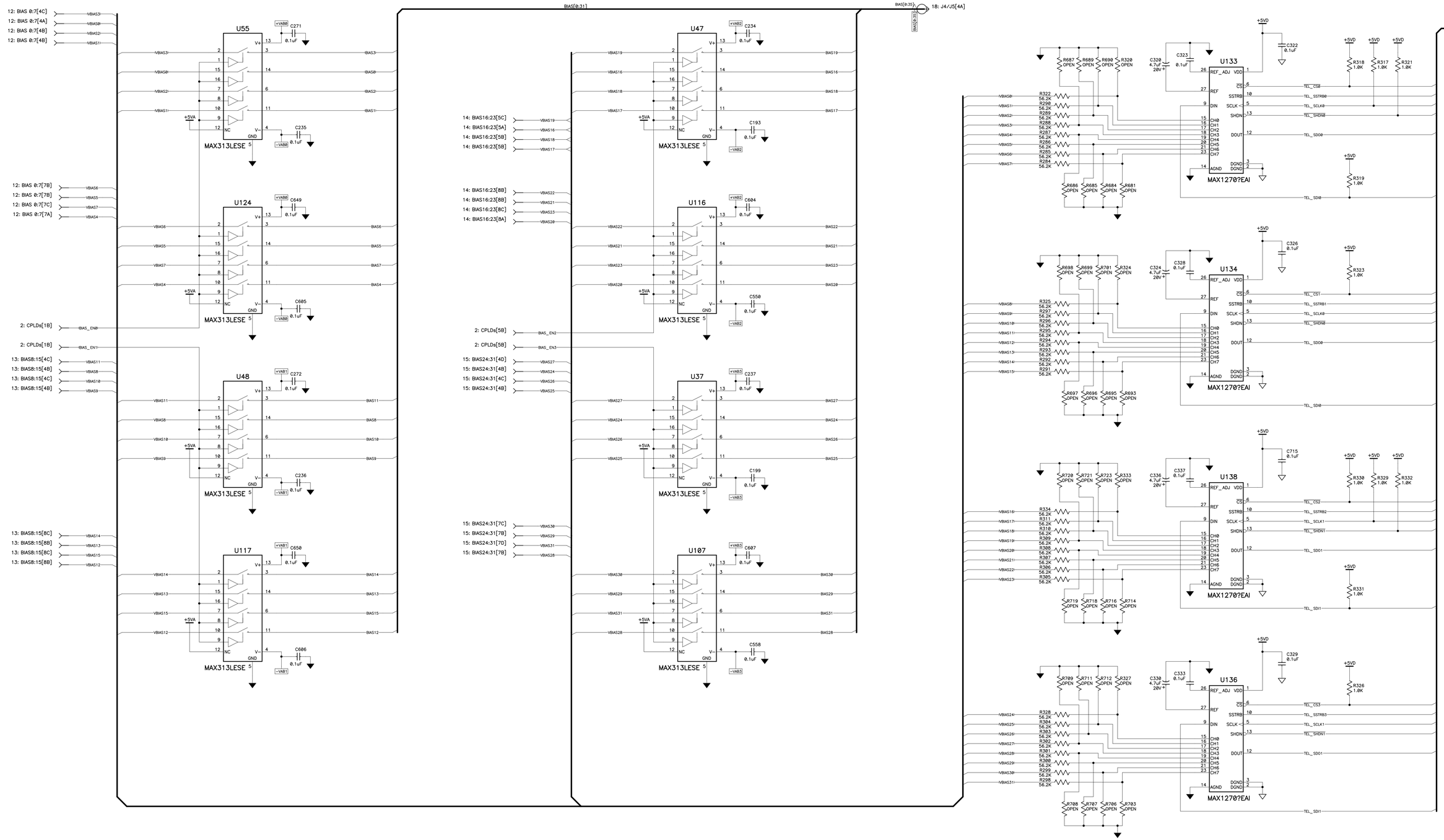

BIAS OUTPUT SWITCHES & TELEMETRY

NATIONAL OPTICAL ASTRONOMY OBSERVATORIES

NAME: SCHEMATIC
MONSOON PROJECT
CCD 8 CH ACQUISITION BOARD

DWG NO	SIZE	REF	REV
MNSN-EL-04-2002	D		B1

RELEASED

Sheet 16 of 18

Modified Date: Fri May 12, 2006
Print Date: Fri May 12, 2006

MNSN-EL-04-2002_rB1.sch

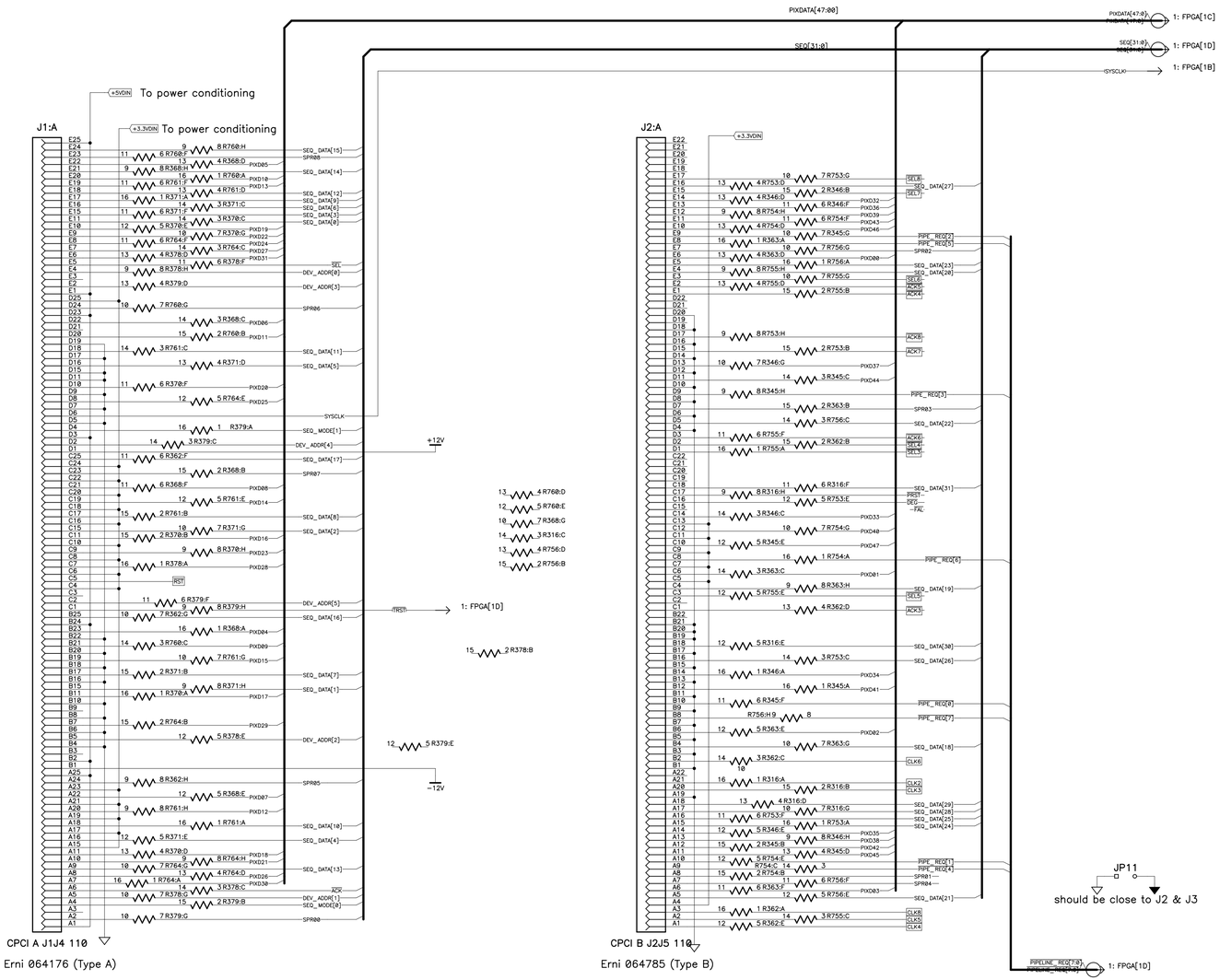

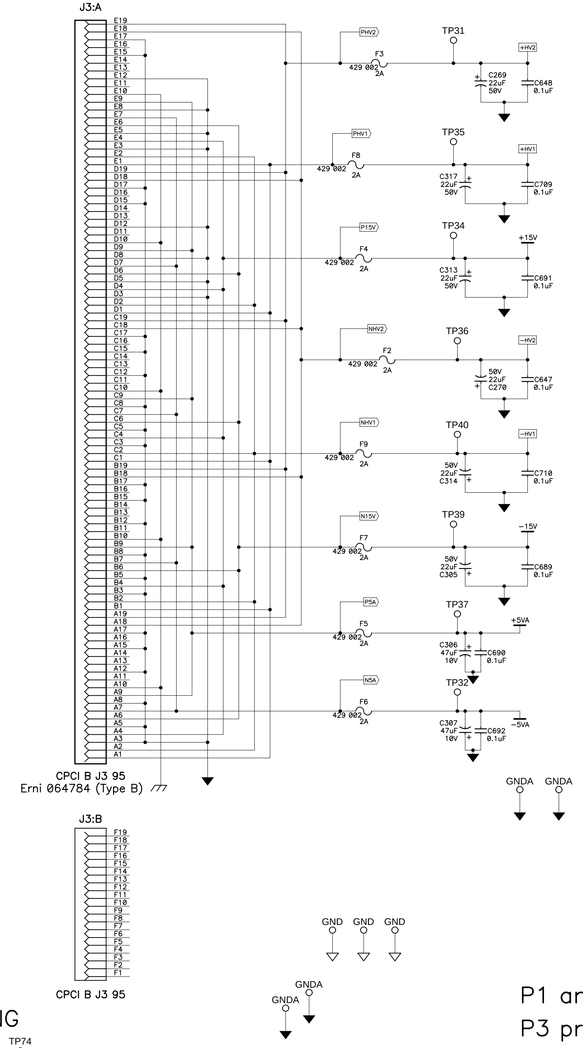

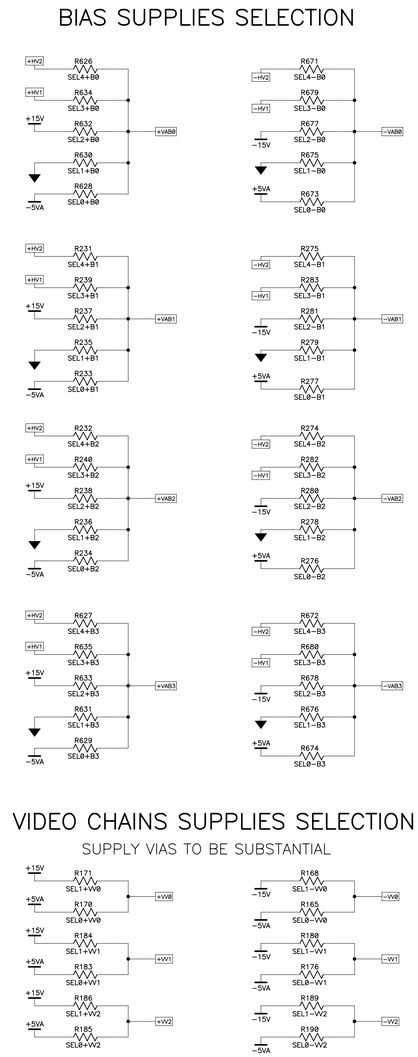

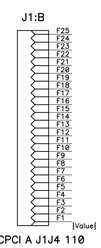

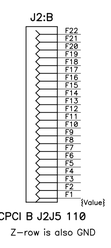

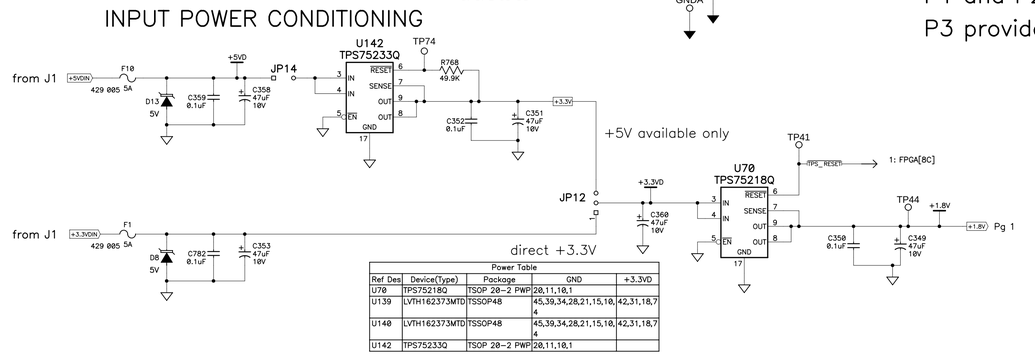

P1 and P2 provide +5V and +3.3V digital

P3 provides +/−5V analog

+/−15V analog

+/− HV1 (High Voltage 1): +/−36V

+/− HV2 (High Voltage 2): +/−40V

Analog gnd

HV gnd

Power Table

Ref Des	Device(Type)	Package	GND	+3.3VD
U70	TPS75218Q	TSOP 20-2 PWP	20,11,10,1	
U139	LVTH162373MTD	TSSOP48	45,39,34,28,21,15,10,4	42,31,18,7
U140	LVTH162373MTD	TSSOP48	45,39,34,28,21,15,10,4	42,31,18,7
U142	TPS75233Q	TSOP 20-2 PWP	20,11,10,1	

Modified Date: Fri May 12, 2006
Print Date: Fri May 12, 2006

cPCI DIGITAL&ANALOG INTERFACE

NATIONAL OPTICAL ASTRONOMY OBSERVATORIES

NAME: SCHEMATIC MONSOON PROJECT CCD 8 CH ACQUISITION BOARD

DWG NO	SIZE	REF	REV
MNSN-EL-04-2002	D		B1

RELEASED

Sheet 17 of 18

MNSN-EL-04-2002_rB1.sch

DIGITAL OUT PORT LATCHES

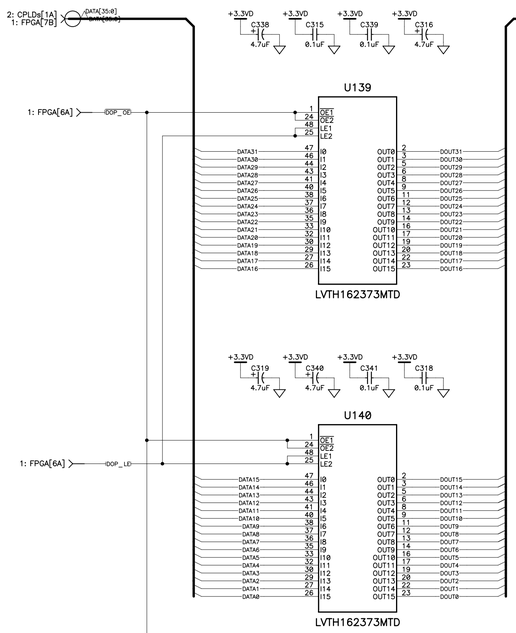

Power Table				
Ref Des	Device(Type)	Package	GND	+3.3VD
U70	TPS75218Q	TSOP 20-2 PWP	20,11,10,1	
U139	LVTH162373MTD	TSSOP48	45,39,34,28,21,15,10,4	42,31,18,7
U140	LVTH162373MTD	TSSOP48	45,39,34,28,21,15,10,4	42,31,18,7
U142	TPS75233Q	TSOP 20-2 PWP	20,11,10,1	

BIAS OUTPUTS & DIGITAL OUTPUT PORT (J4)

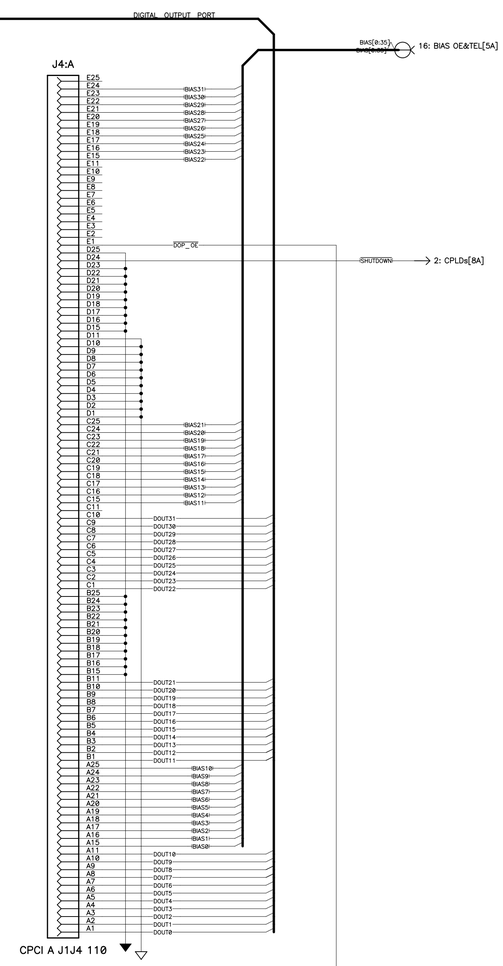

Erni 064176 (Type A)

J4:B

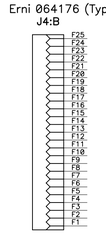

CPCI A J1J4 110

VIDEOINPUTS (J4)

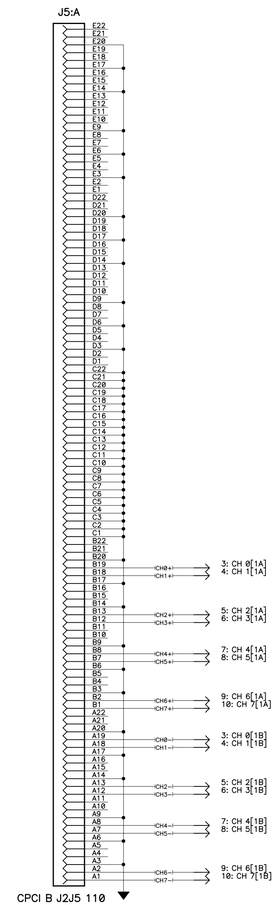

Erni 064785 (Type B)

J5:B

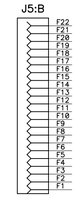

CPCI B J2J5 110

Z-row is GND

FRONT PANEL TEST POINTS

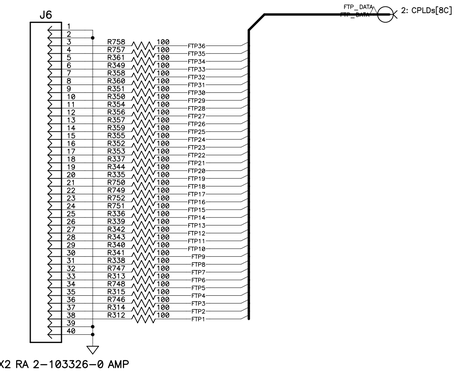

cPCI Peripheral INTERFACE

Modified Date: Fri May 12, 2006
Print Date: Fri May 12, 2006

NATIONAL OPTICAL ASTRONOMY OBSERVATORIES			
NAME SCHEMATIC MONSOON PROJECT CCD 8 CH ACQUISITION BOARD			
DWG NO MNSN-EL-04-2002	SIZE D	REF	REV B1
RELEASED		Sheet 18 of 18	

MNSN-EL-04-2002_rB1.sch