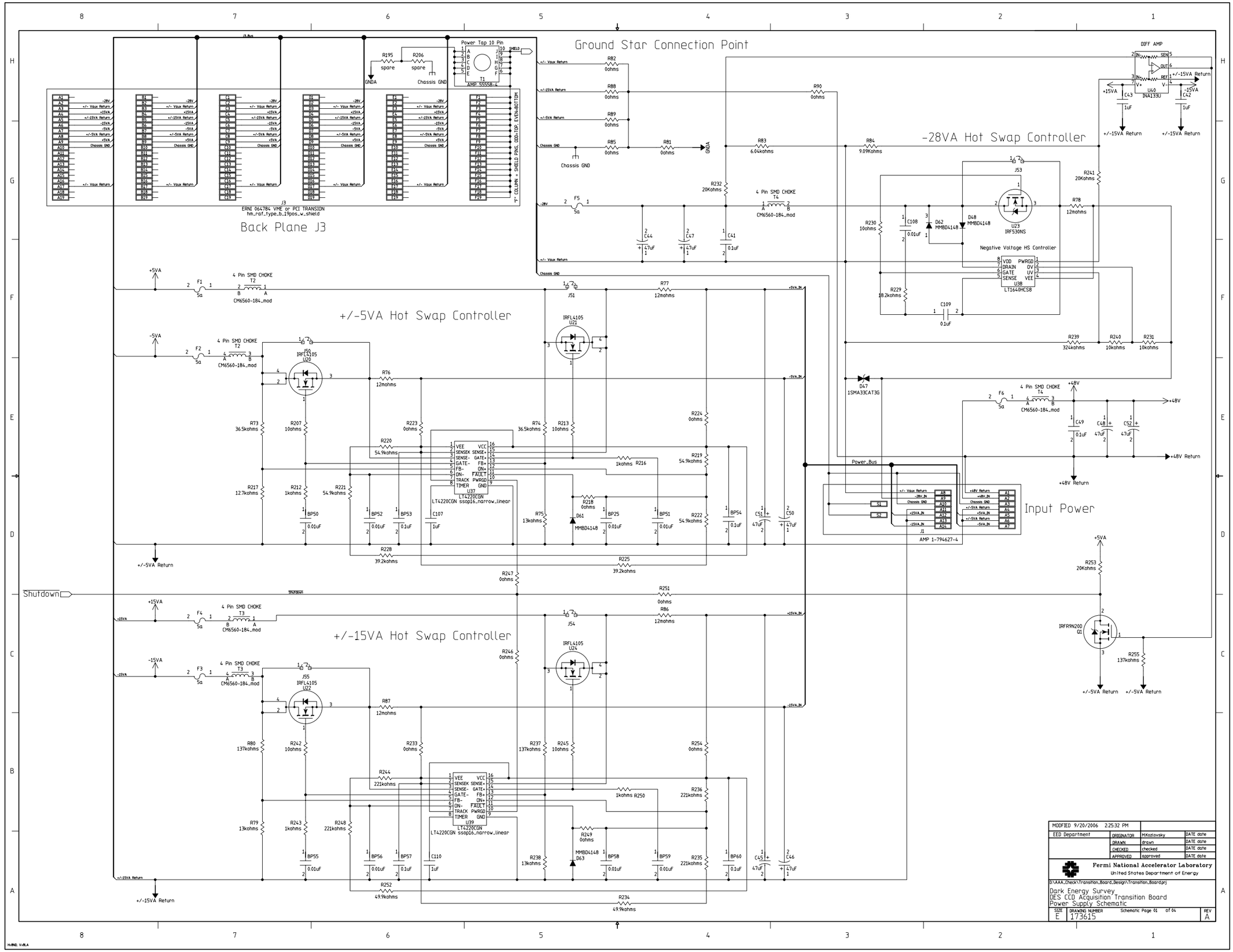
Ground Star Connection Point
Back Plane J3
ERNI 064784 VME or PCI TRANSION
hm_raf_type_b_19pos_w_shield
Power Tap 10 Pin
AMP 5555B-4
T1
R195 spare
R206 spare
GNDA
Chassis GND
R82 0ohms
R88 0ohms
R89 0ohms
R85 0ohms
R81 0ohms
R90 0ohms
R83 6.044kohms
R84 9.09Kohms
R232 20Kohms
F5 5a
C44 47uF
C47 47uF
C41 0.1uF
4 Pin SMD CHOKE
T4
CM6560-184_mod
DIFF AMP
U40
INA133U
C43 1uF
C42 1uF
+15VA
-15VA
+/-15VA Return
-28VA Hot Swap Controller
J53
U23
IRF530NS
D48 MMBD4148
D62 MMBD4148
C108 0.01uF
R230 10ohms
R229 18.2kohms
C109 0.1uF
R241 20Kohms
R78 12mohms
Negative Voltage HS Controller
U38
LT1640HCS8
VDD PWRGD
DRAIN OV
GATE UV
SENSE VEE
R239 324kohms
R240 10kohms
R231 10kohms
D47 1SMA33CAT3G
+48V
F6 5a
C49 0.1uF
C48 47uF
C52 47uF
+48V Return
Power Bus
J1
AMP 1-794627-4
S1
S2
Input Power
+/-5VA Hot Swap Controller
+5VA
-5VA
F1 5a
F2 5a
J51
IRFL4105
U21
U20
R77 12mohms
R76 12mohms
R73 36.5kohms
R207 10ohms
R74 36.5kohms
R213 10ohms
R224 0ohms
R223 0ohms
R220 54.9kohms
R217 12.7kohms
R212 1kohms
R221 54.9kohms
R216 1kohms
R219 54.9kohms
U37
LT4220CGN ssop16_narrow_linear
R218 0ohms
D61 MMBD4148
R75 13kohms
R222 54.9kohms
BP50 0.01uF
BP52 0.01uF
BP53 0.1uF
C107 1uF
BP25 0.01uF
BP51 0.01uF
BP54 0.1uF
C51 47uF
C50 47uF
R228 39.2kohms
R225 39.2kohms
+/-5VA Return
R247 0ohms
R251 0ohms
Shutdown
+15VA Hot Swap Controller
+15VA
-15VA
F4 5a
F3 5a
J54
J55
IRFL4105
U24
U22
R86 12mohms
R87 12mohms
R246 0ohms
R80 137kohms
R242 10ohms
R233 0ohms
R237 137kohms
R245 10ohms
R254 0ohms
R244 221kohms
R236 221kohms
R216 1kohms
U39
LT4220CGN ssop16_narrow_linear
R79 13kohms
R243 1kohms
R248 221kohms
R249 0ohms
D63 MMBD4148
R238 13kohms
R235 221kohms
BP55 0.01uF
BP56 0.01uF
BP57 0.1uF
C110 1uF
BP58 0.01uF
BP59 0.01uF
BP60 0.1uF
C45 47uF
C46 47uF
R252 49.9kohms
R234 49.9kohms
+/-15VA Return
+5VA
R253 20Kohms
IRFR9N20D
Q1
R255 137kohms
+/-5VA Return
MODFIED 9/20/2006 2:25:32 PM
EED Department
ORIGINATOR MKozlovsky DATE date
DRAWN drawn DATE date
CHECKED checked DATE date
APPROVED approved DATE date
Fermi National Accelerator Laboratory
United States Department of Energy
D:\AAA_Check\Transition_Board_Design\Transition_Board.prj
Dark Energy Survey
DES CCD Acquisition Transition Board
Power Supply Schematic
SIZE E
DRAWING NUMBER 173615
Schematic Page 01 of 04
REV A

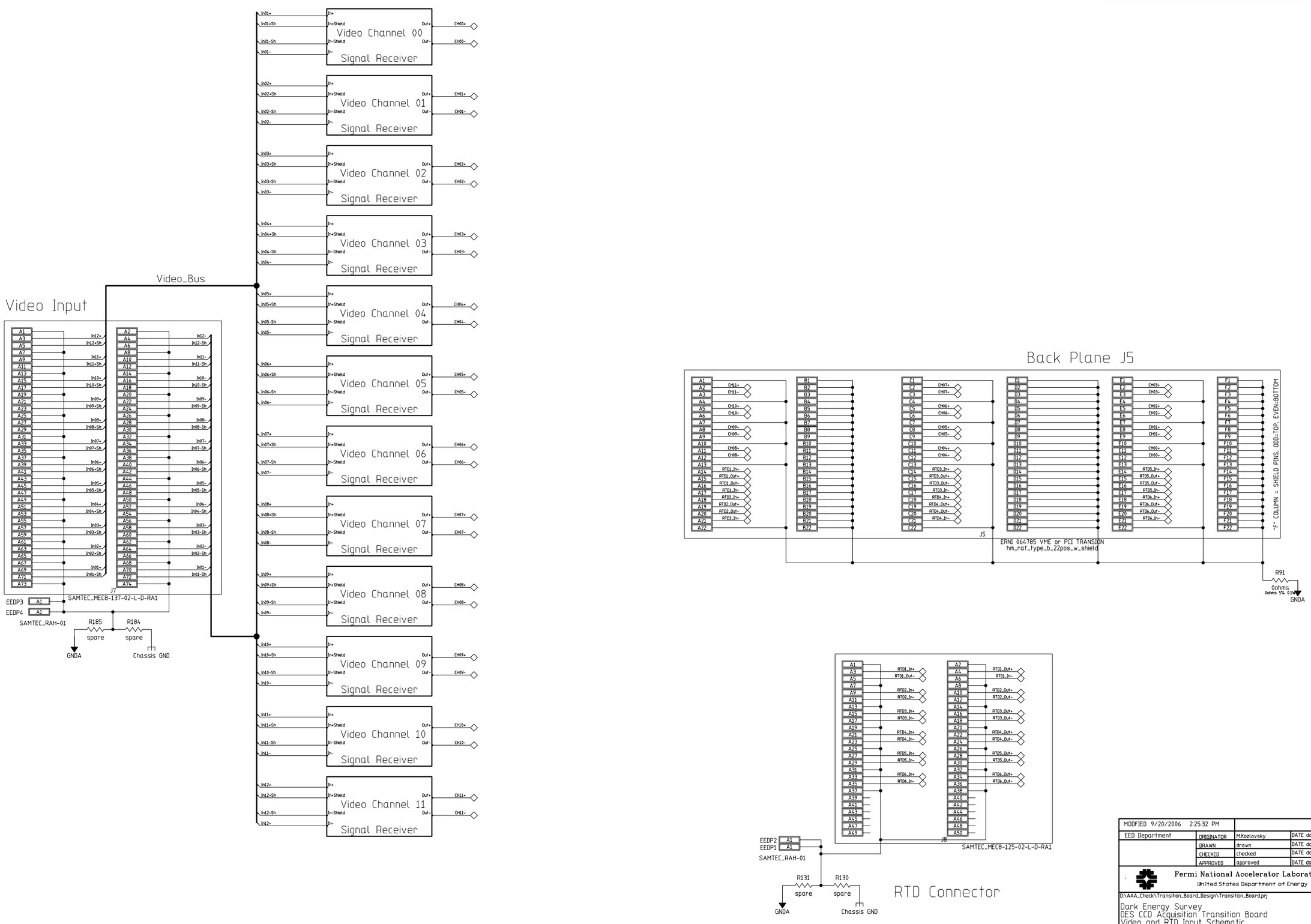

MODIFIED 9/20/2006 2:25:32 PM			
EED Department	ORIGINATOR	MKozlovsky	DATE date
	DRAWN	drawn	DATE date
	CHECKED	checked	DATE date
	APPROVED	approved	DATE date

Fermi National Accelerator Laboratory
United States Department of Energy

D:\AAA_Check\Transition_Board_Design\Transition_Board.prj

Dark Energy Survey
DES CCD Acquisition Transition Board
Video and RTD Input Schematic

SIZE	DRAWING NUMBER	Schematic Page 02 of 04	REV
F	173615		A

H=8ND. V=6LA

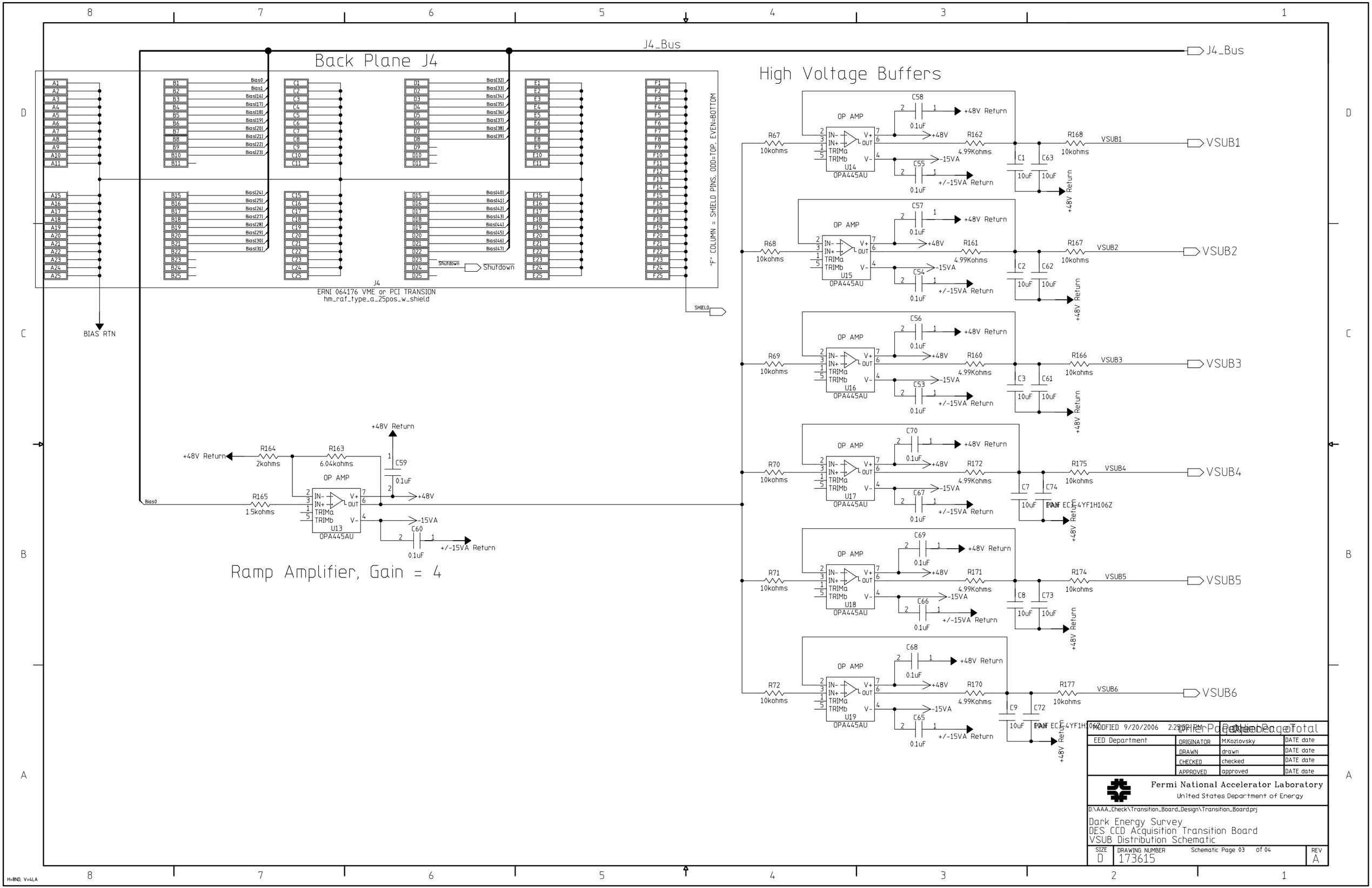

MODIFIED 9/20/2006 2:25:02 PM

EED Department	ORIGINATOR	M.Kozlovsky	DATE date
	DRAWN	drawn	DATE date
	CHECKED	checked	DATE date
	APPROVED	approved	DATE date

Fermi National Accelerator Laboratory
United States Department of Energy

D:\AAA_Check\Transition_Board_Design\Transition_Board.prj

Dark Energy Survey
DES CCD Acquisition Transition Board
VSUB Distribution Schematic

SIZE	DRAWING NUMBER	Schematic Page 03 of 04	REV
D	173615		A

H=8ND, V=4LA

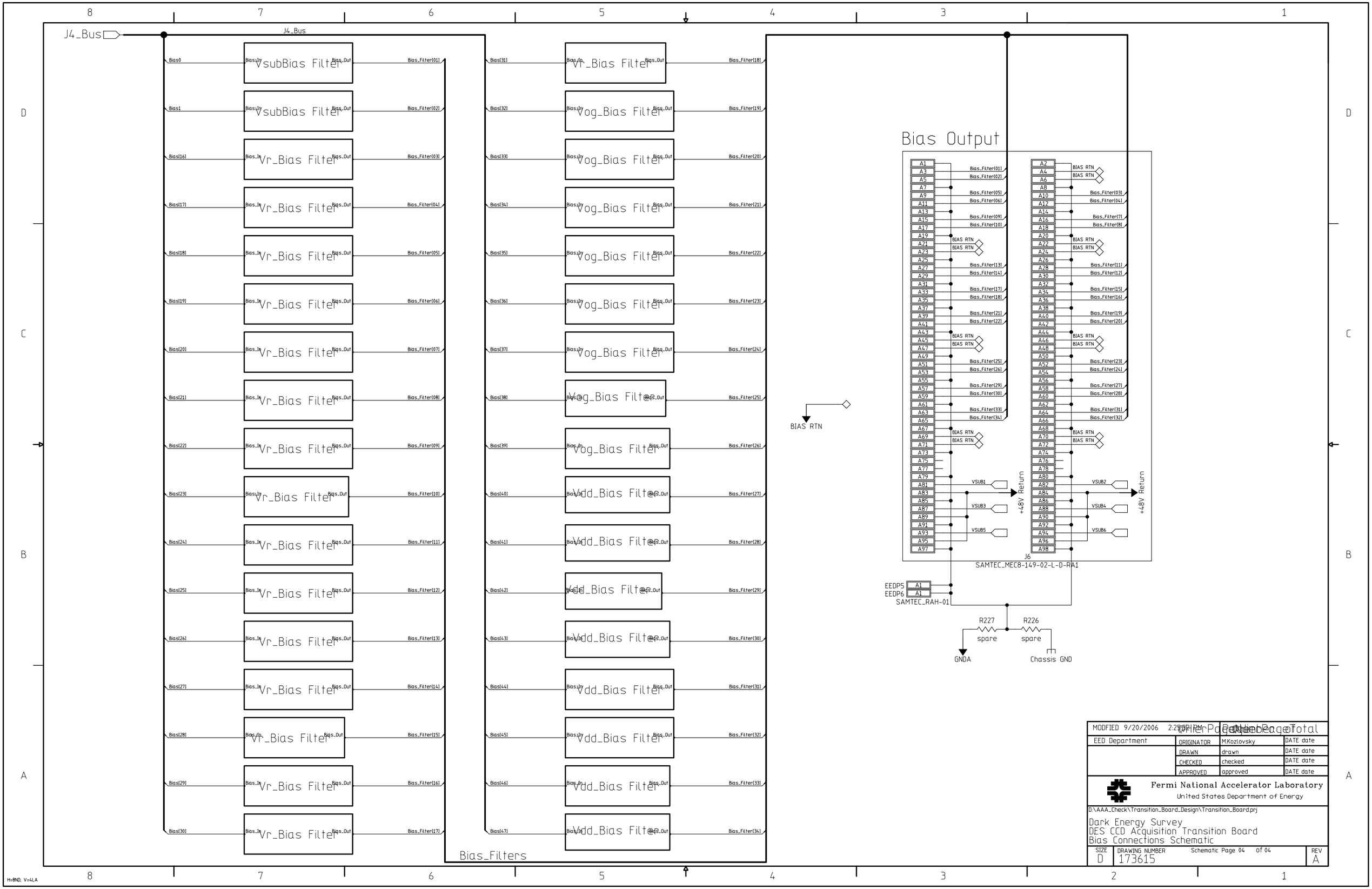
J4_Bus
VsubBias Filter
Vr_Bias Filter
Vog_Bias Filter
Vdd_Bias Filter
Bias_Filters
Bias Output
BIAS RTN
+48V Return
J6
SAMTEC_MEC8-149-02-L-D-RA1
EEDP5
EEDP6
SAMTEC_RAH-01
R227
R226
spare
GNDA
Chassis GND
MODFIED 9/20/2006
EED Department
ORIGINATOR M.Kozlovsky DATE date
DRAWN drawn DATE date
CHECKED checked DATE date
APPROVED approved DATE date
Fermi National Accelerator Laboratory
United States Department of Energy
D:\AAA_Check\Transition_Board_Design\Transition_Board.prj
Dark Energy Survey
DES CCD Acquisition Transition Board
Bias Connections Schematic
SIZE D
DRAWING NUMBER 173615
Schematic Page 04 of 04
REV A
H=8ND; V=4LA

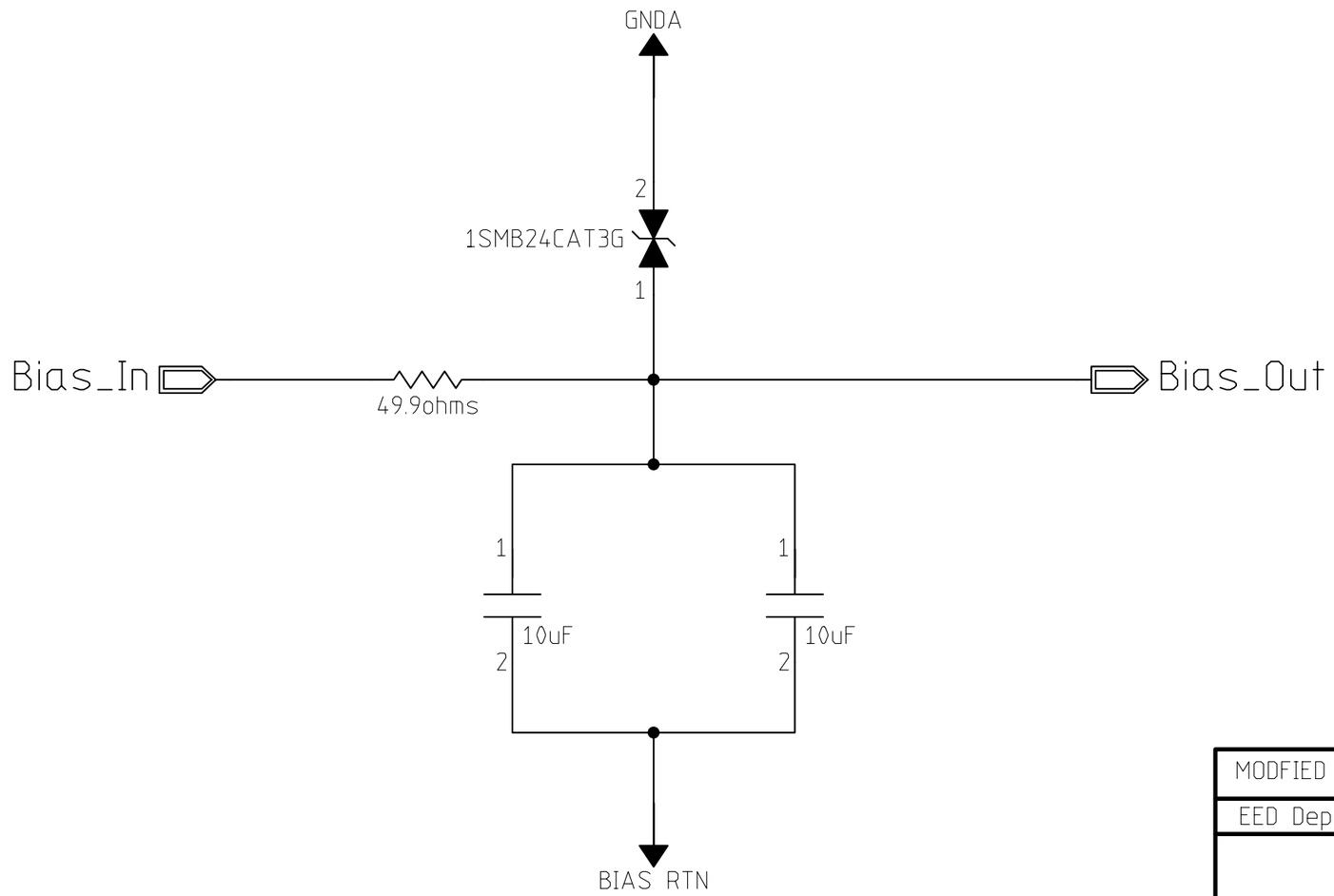

MODFIED 5/5/2006 11:43:22 AM			
EED Department	ORIGINATOR	M.Kozlovsky	DATE date
	DRAWN	drawn	DATE date
	CHECKED	checked	DATE date
	APPROVED	approved	DATE date

Fermi National Accelerator Laboratory
United States Department of Energy

D:\AAA_Check\Transition_Board_Design\Transition_Board.prj

Dark Energy Survey
DES CCD Acquisition Transition Board
Bias Filter Schematic

SIZE	DRAWING NUMBER		REV
B	173615	Schematic Page 01 of 01	A

H=2LA; V=2LA

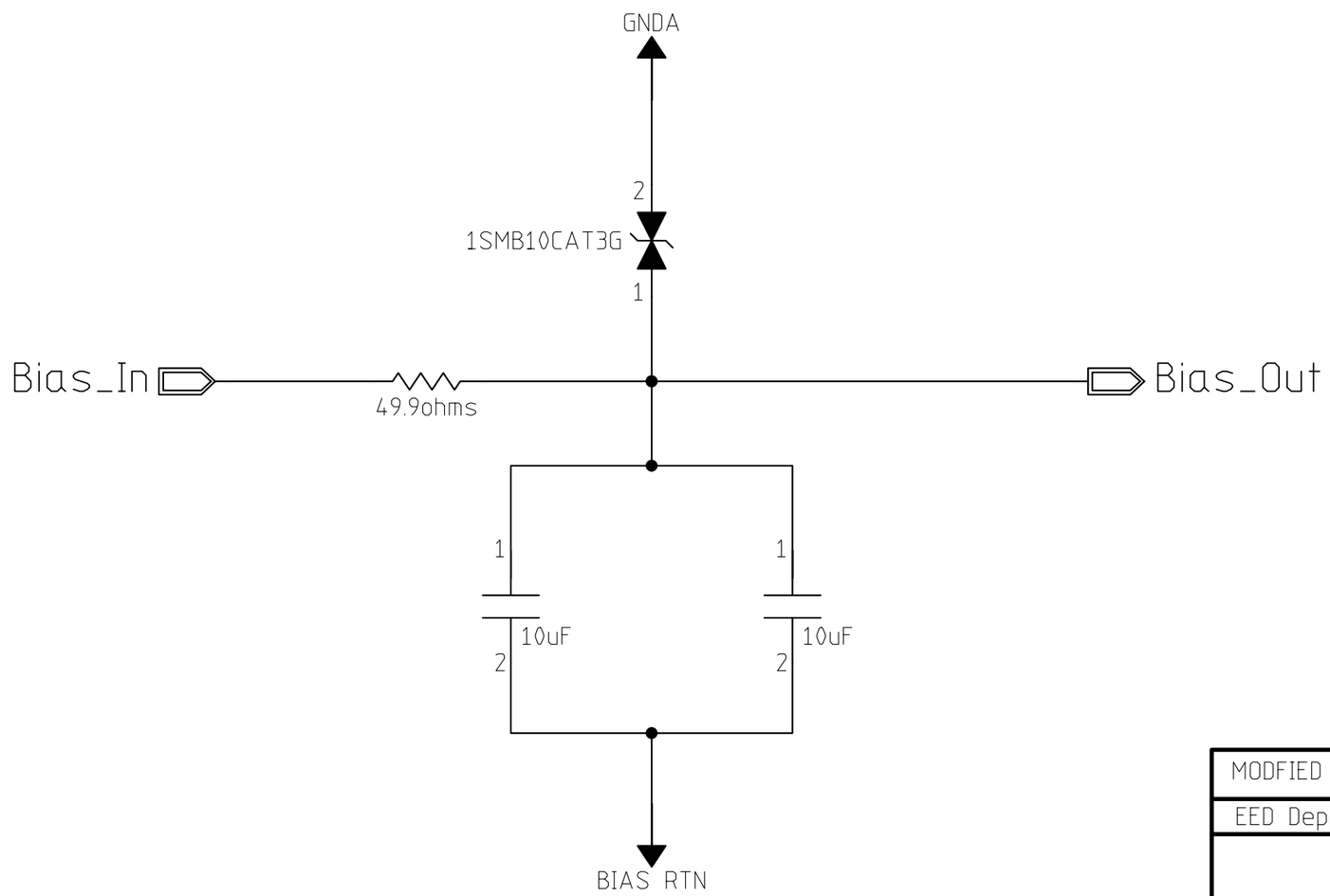

MODFIED 5/5/2006 11:42:50 AM			
EED Department	ORIGINATOR	M.Kozlovsky	DATE date
	DRAWN	drawn	DATE date
	CHECKED	checked	DATE date
	APPROVED	approved	DATE date

Fermi National Accelerator Laboratory
United States Department of Energy

D:\AAA_Check\Transition_Board_Design\Transition_Board.prj

Dark Energy Survey
DES CCD Acquisition Transition Board
Bias Filter Schematic

SIZE	DRAWING NUMBER		REV
B	173615	Schematic Page 01 of 01	A

H=2LA; V=2LA

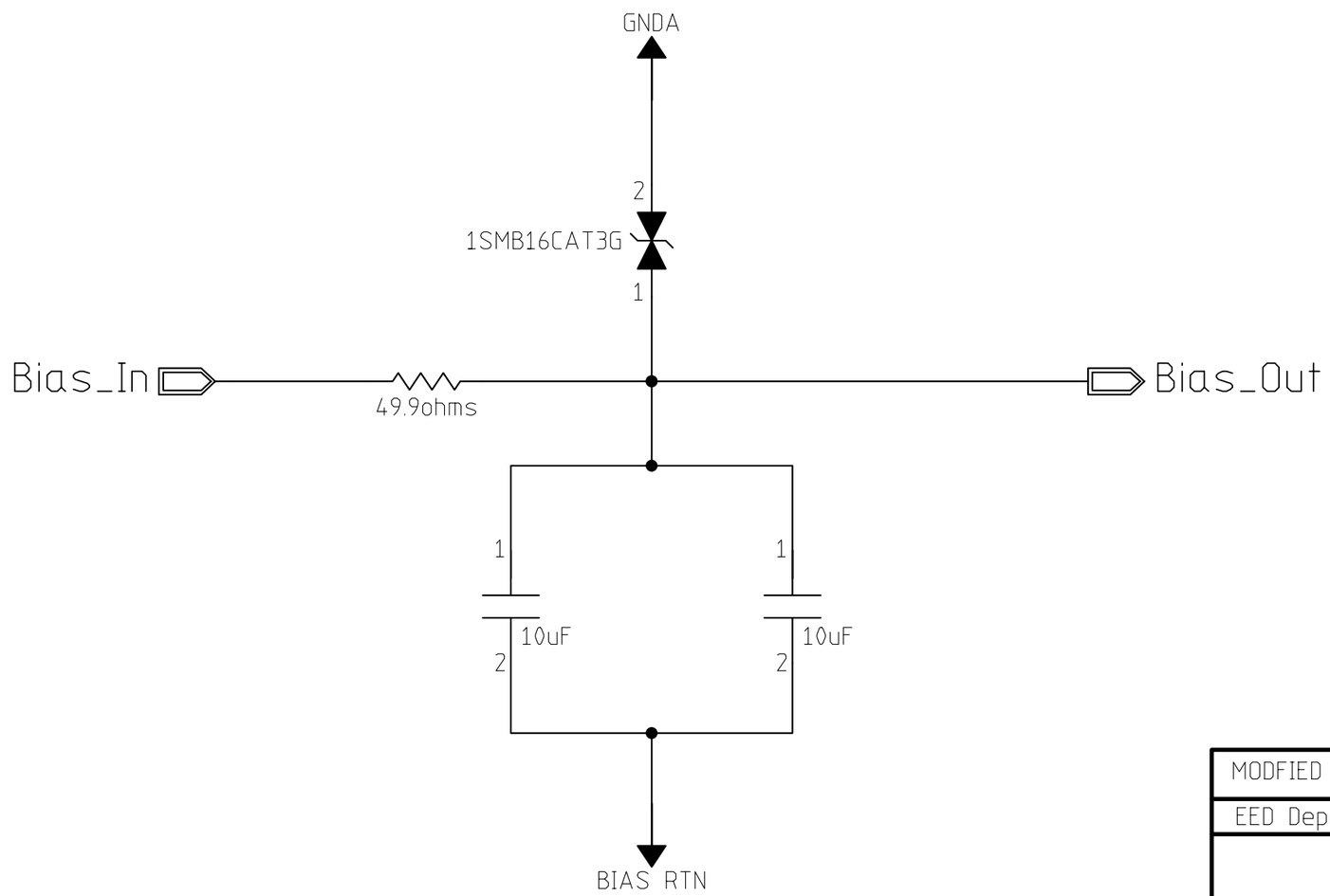

MODFIED 5/5/2006 11:42:17 AM			
EED Department	ORIGINATOR	M.Kozlovsky	DATE date
	DRAWN	drawn	DATE date
	CHECKED	checked	DATE date
	APPROVED	approved	DATE date

Fermi National Accelerator Laboratory
United States Department of Energy

D:\AAA_Check\Transition_Board_Design\Transition_Board.prj

Dark Energy Survey
DES CCD Acquisition Transition Board
Bias Filter Schematic

SIZE	DRAWING NUMBER		REV
B	173615	Schematic Page 01 of 01	A

H=2LA; V=2LA

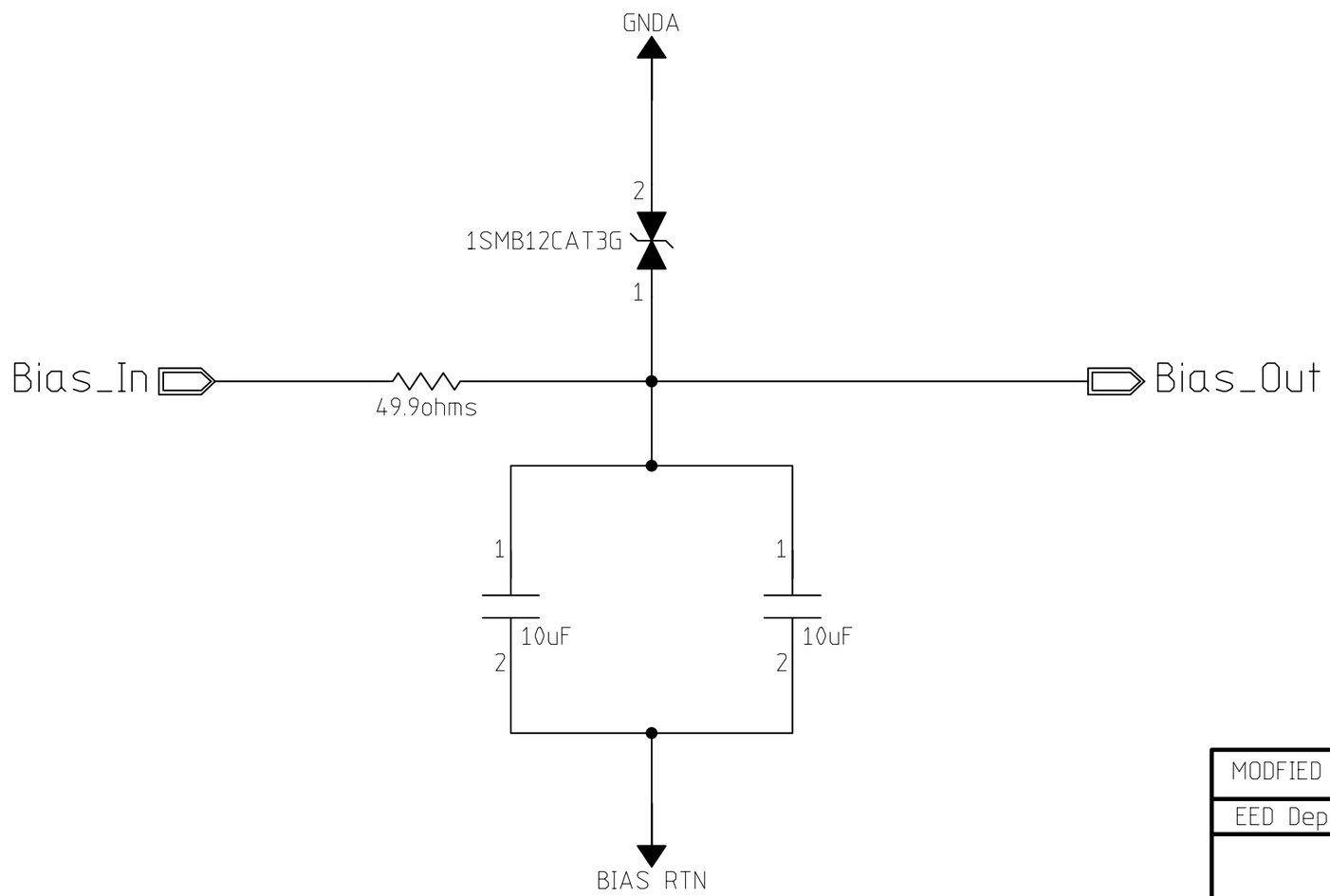

MODFIED 5/5/2006 11:41:42 AM			
EED Department	ORIGINATOR	M.Kozlovsky	DATE date
	DRAWN	drawn	DATE date
	CHECKED	checked	DATE date
	APPROVED	approved	DATE date

Fermi National Accelerator Laboratory
United States Department of Energy

D:\AAA_Check\Transition_Board_Design\Transition_Board.prj

Dark Energy Survey
DES CCD Acquisition Transition Board
Bias Filter Schematic

SIZE	DRAWING NUMBER		REV
B	173615	Schematic Page 01 of 01	A

H=2LA; V=2LA

Differential Shield Driver

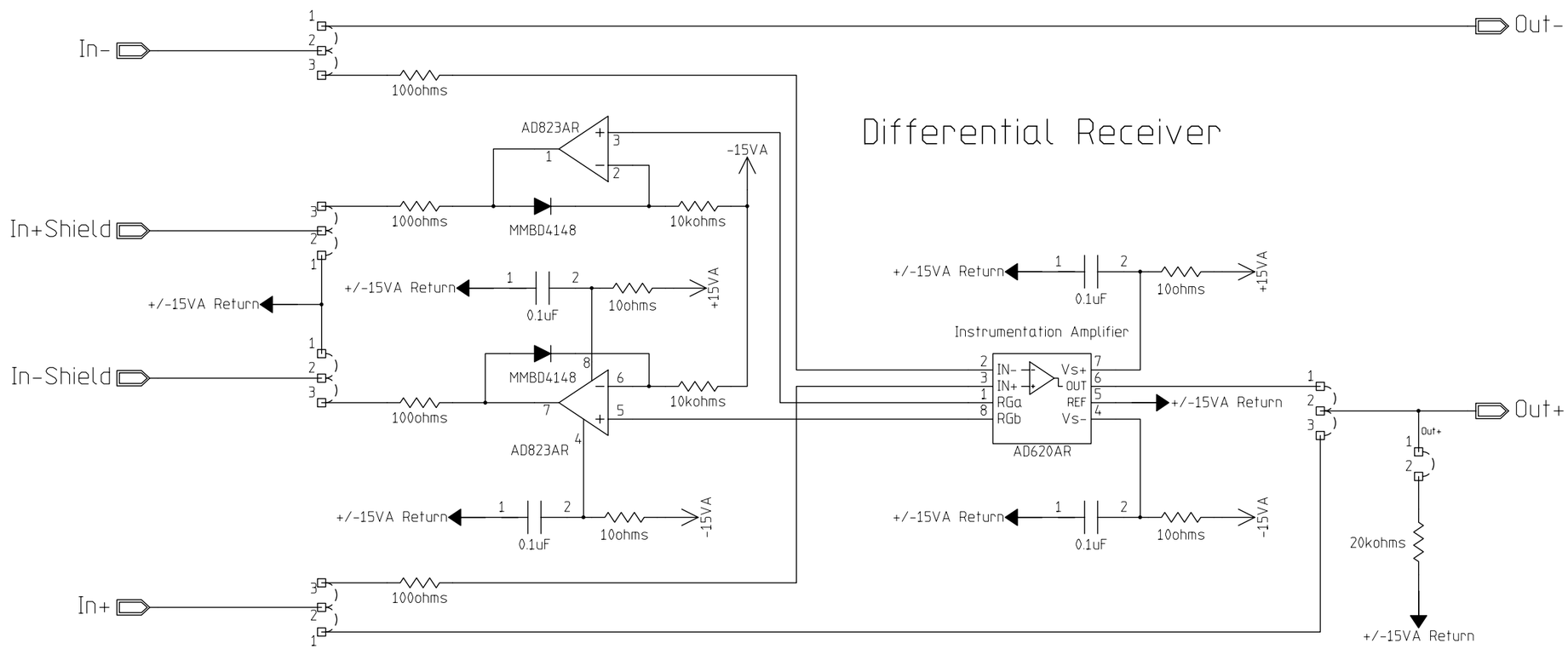

MODFIED 9/13/2006 12:57:22 PM			
EED Department	ORIGINATOR	M.Kozlovsky	DATE date
	DRAWN	drawn	DATE date
	CHECKED	checked	DATE date
	APPROVED	approved	DATE date

Fermi National Accelerator Laboratory
United States Department of Energy

D:\AAA_Check\Transition_Board_Design\Transition_Board.prj

Dark Energy Survey
DES CCD Acquisition Transition Board
Signal Receiver Schematic

SIZE	DRAWING NUMBER		REV
C	173615	Schematic Page 01 of 01	A

H=4ND; V=4LA