CCD Interface Board with JFET Buffer

(Flex Circuit Head)

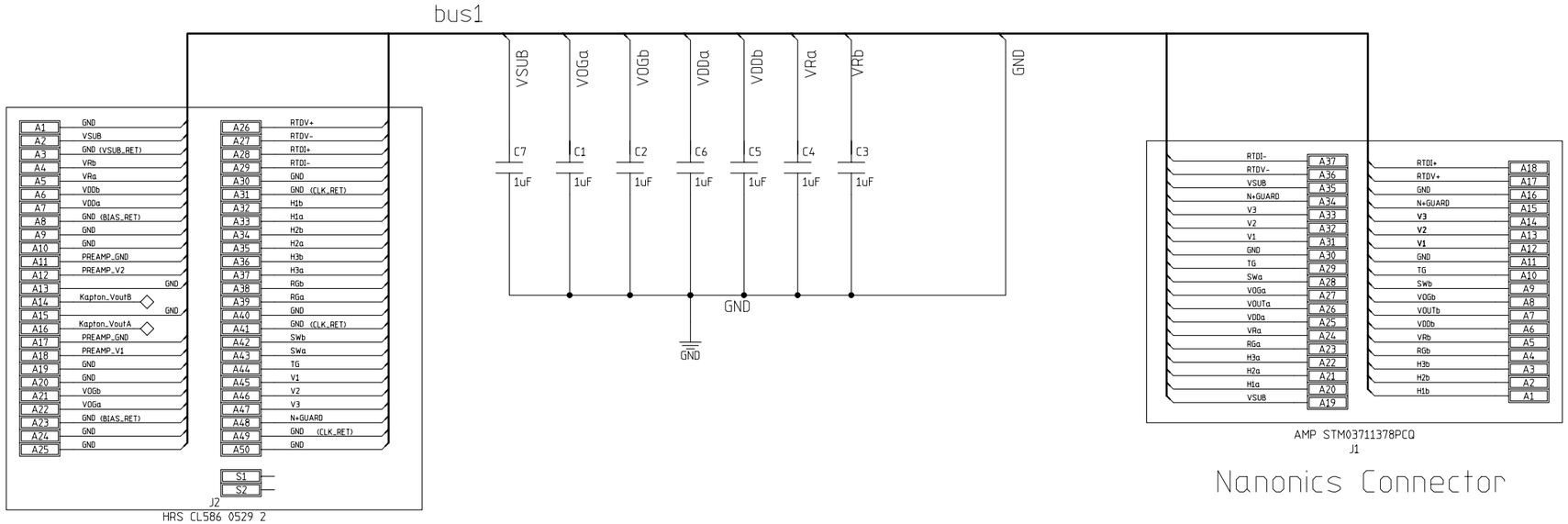

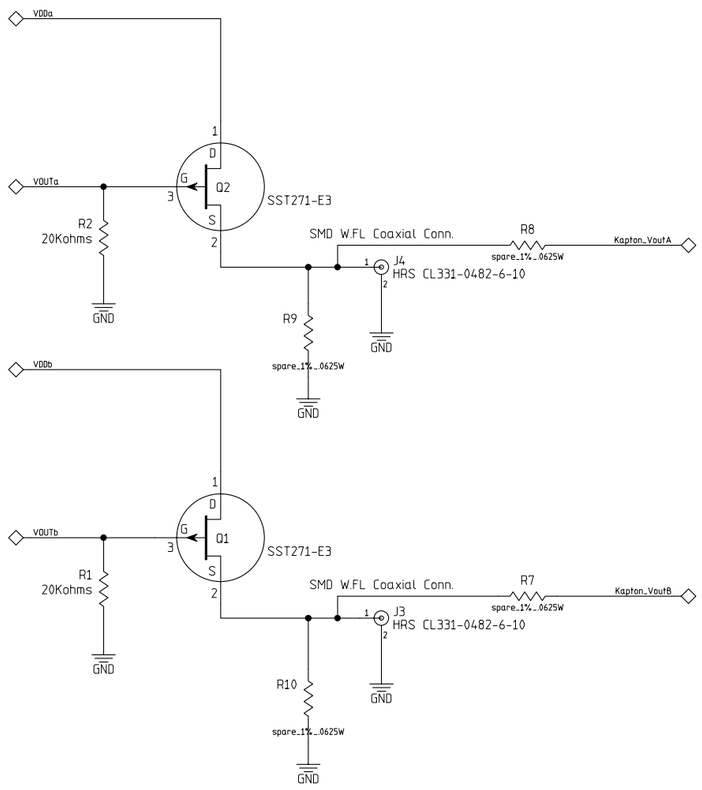

MODIFIED 6/26/2007 2:17:22 PM			
EED Department	ORIGINATOR	originator	DATE date
	DRAWN	drawn	DATE date
	CHECKED	checked	DATE date
	APPROVED	approved	DATE date

Fermi National Accelerator Laboratory
United States Department of Energy

D:\AAA_Check\DES_CCD_Interface_v4\DES_CCD_Interface_v4.prj

SIZE	DRAWING NUMBER	REV
D	drawing number (Schematic Page 01 of 01)	A

H=8ND; V=4LA