DES Heaters Control System

By Mark Kozlovsky

June 1, 2006

Heater Controller Specification

- Heater resistance 25 ohms.
- Maximum heater operating voltage 20 VDC
- Maximum heater current 0.8 amps
- Quantity, twelve heaters
- DC power supply
- Output voltage must not exceed 50 volts

Heater Controller Specification (continuation)

- Overcurrent protection limited to 2 amp
- Noise not to exceed that of a Lakeshore Controller #332
  - Loop 1: 50 μV + 0.017% of output voltage <1kHz RMS
  - Loop 2 <0.3 mV <1kHz RMS

Heater Controller Specification (continuation)

- Input signal is from a NI cFP-AO-210 analog output module
  - Signal is 0-10 VDC
  - Maximum current 1 mA
  - Signals are single-ended, all returns are common.
  - Full manual at http://www.ni.com/pdf/manuals/323347a.pdf
- The input signal must be isolated from the heaters.

Heater ControlLer Block Diagram

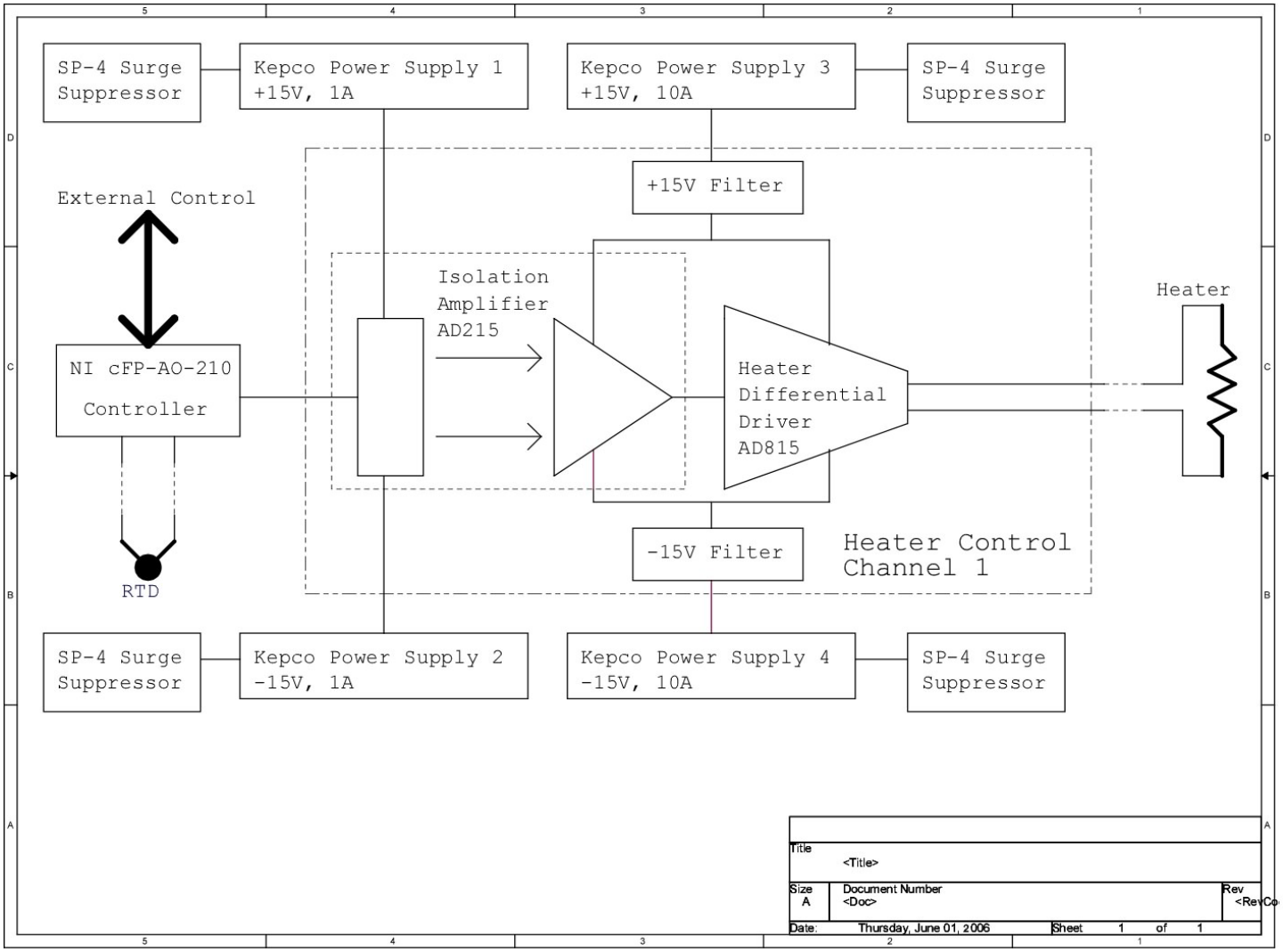

Heater Driver Simulation Schematic

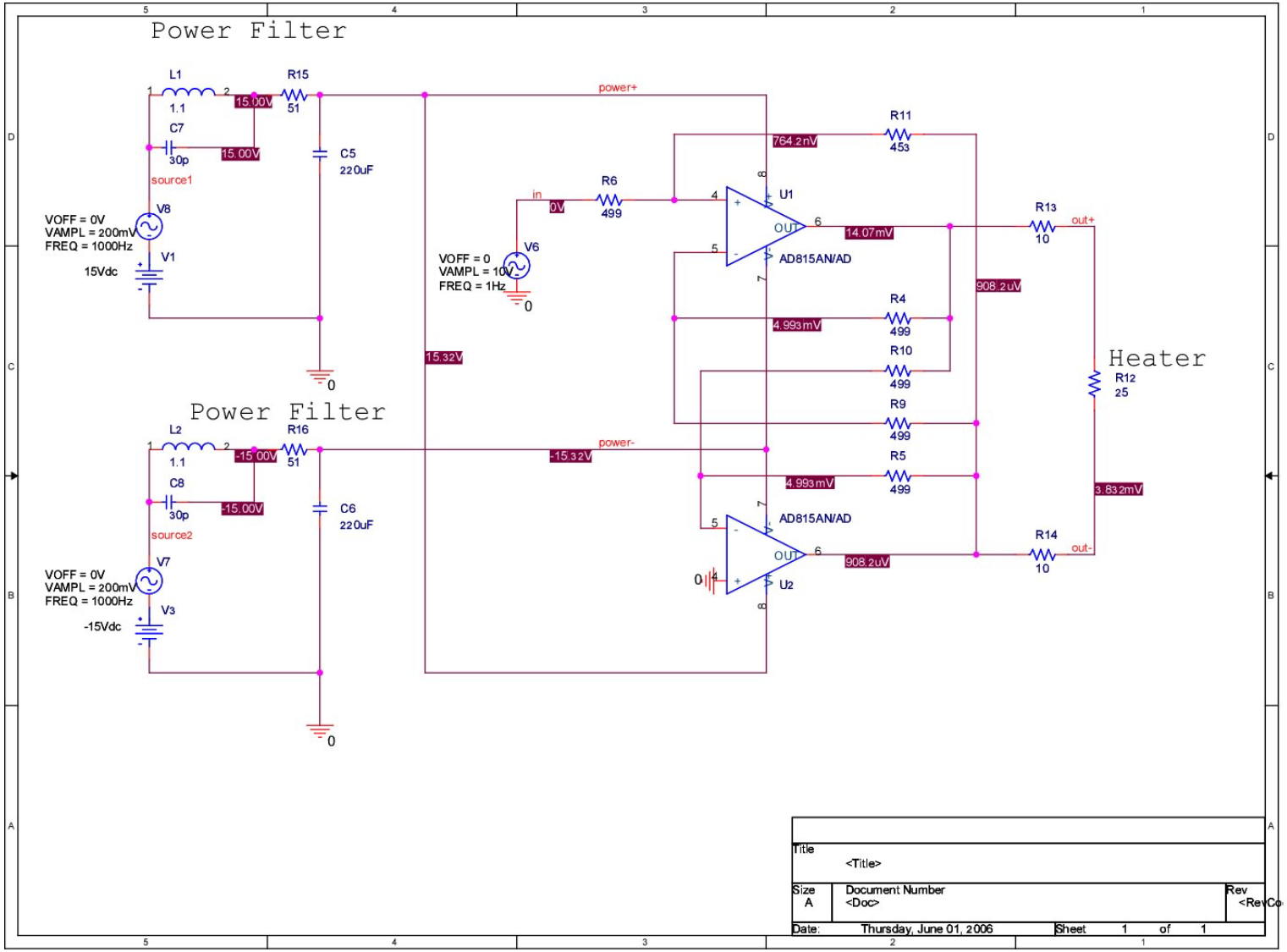

Heater Driver Simulation Results

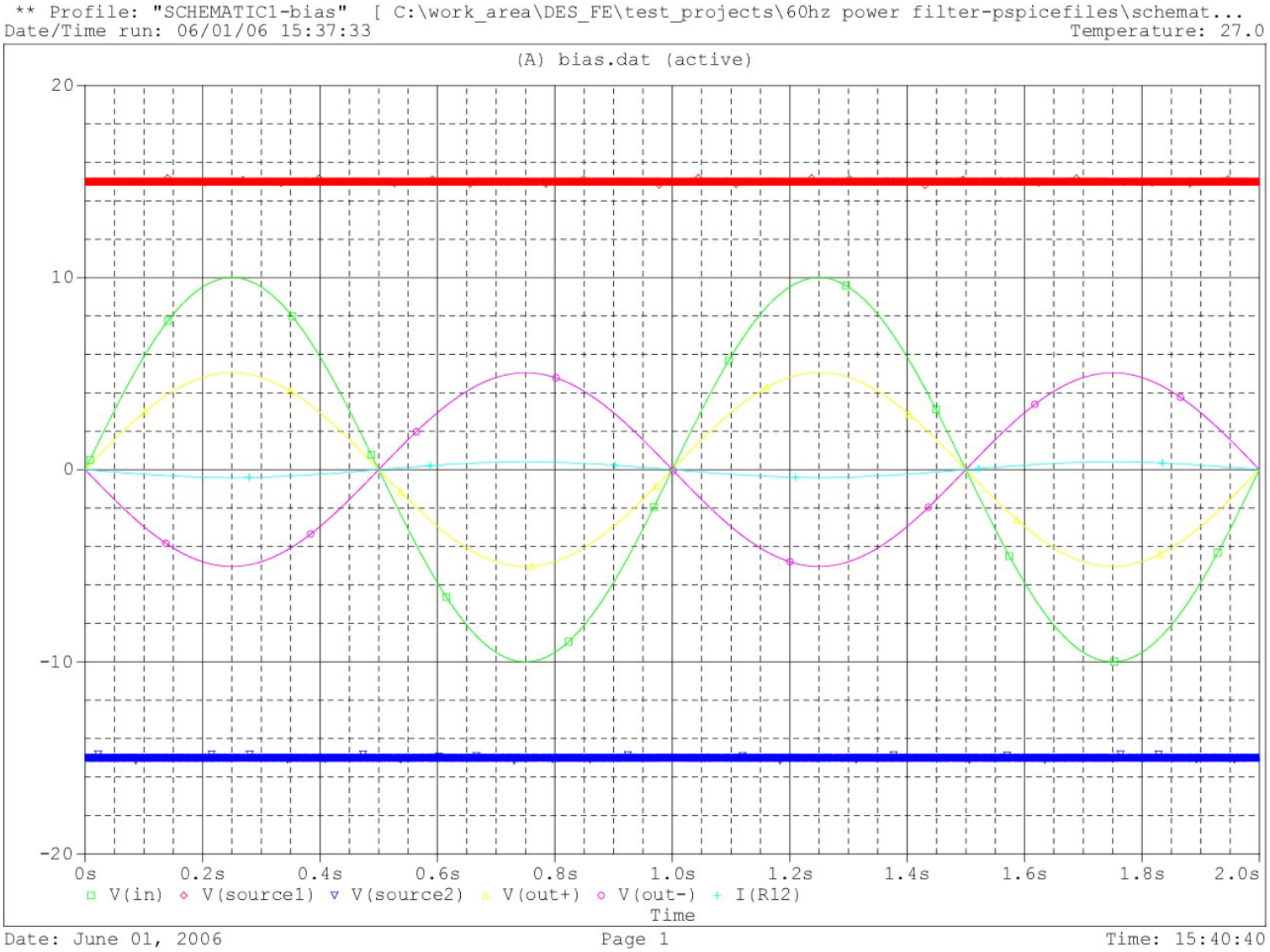

Heater Driver Simulation Schematic for Frequency Response Measurements

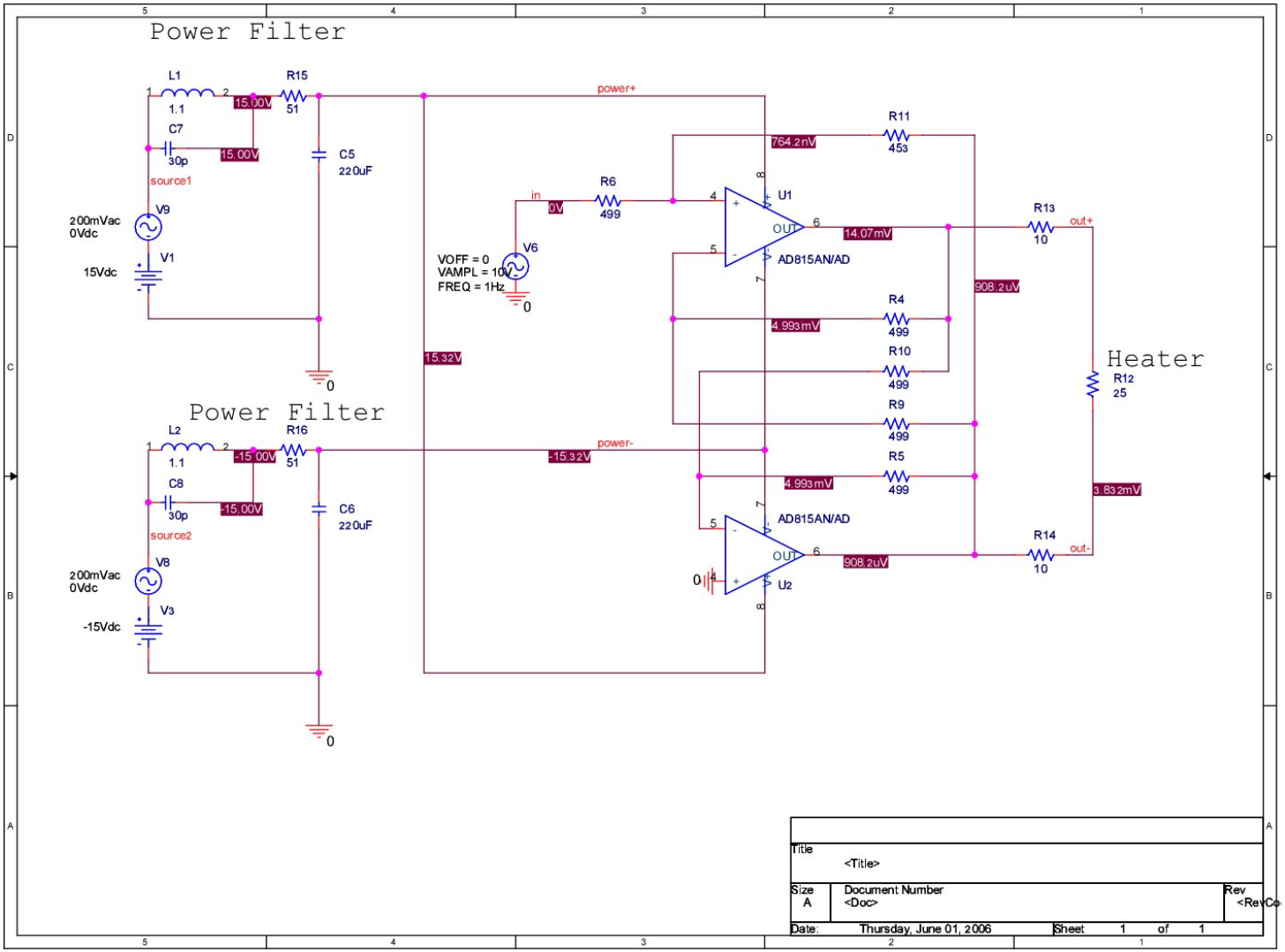

Power Filter Noise Simulation Results

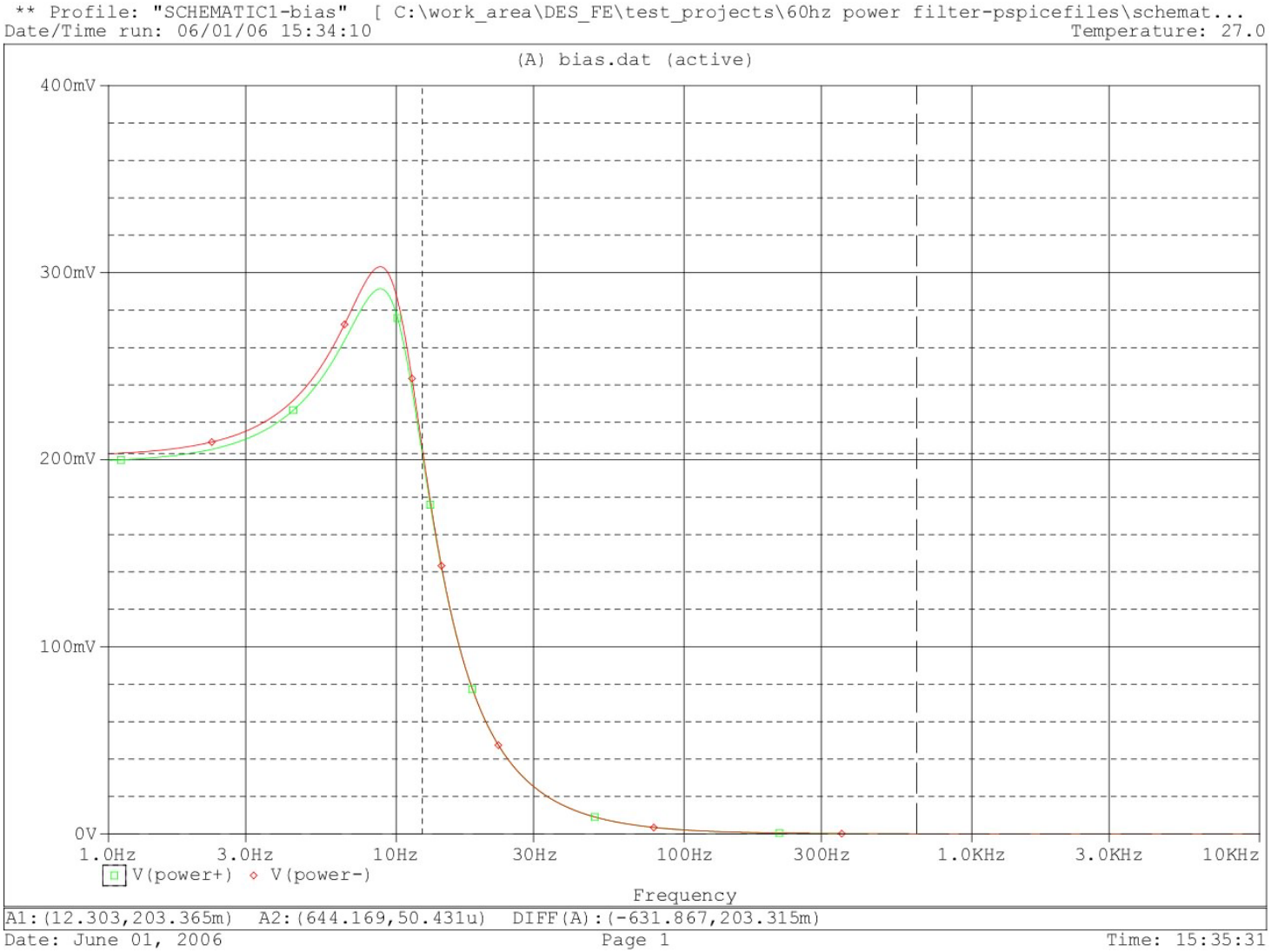

Power Filter Frequency Response

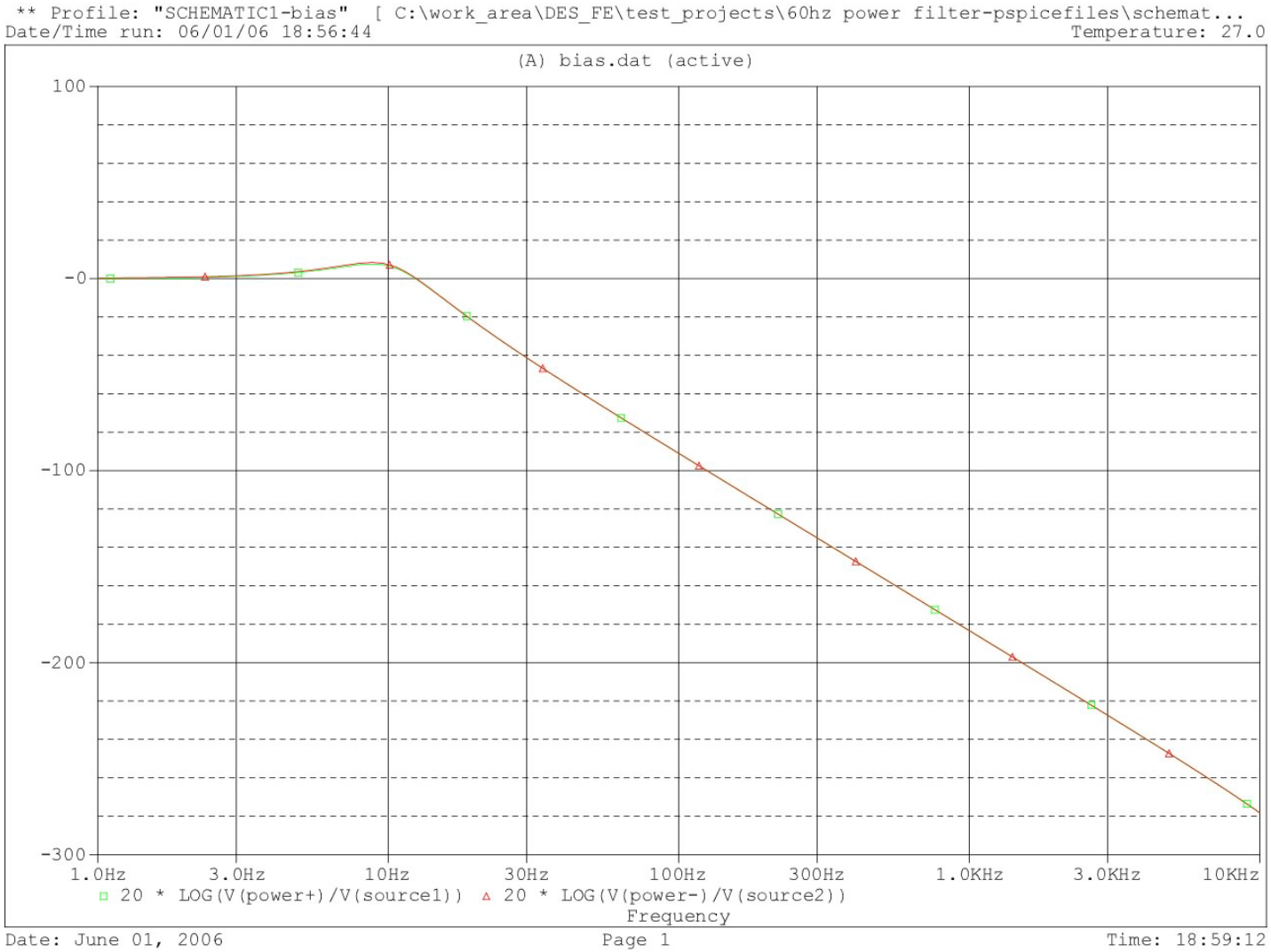

Shorted Heater Driver

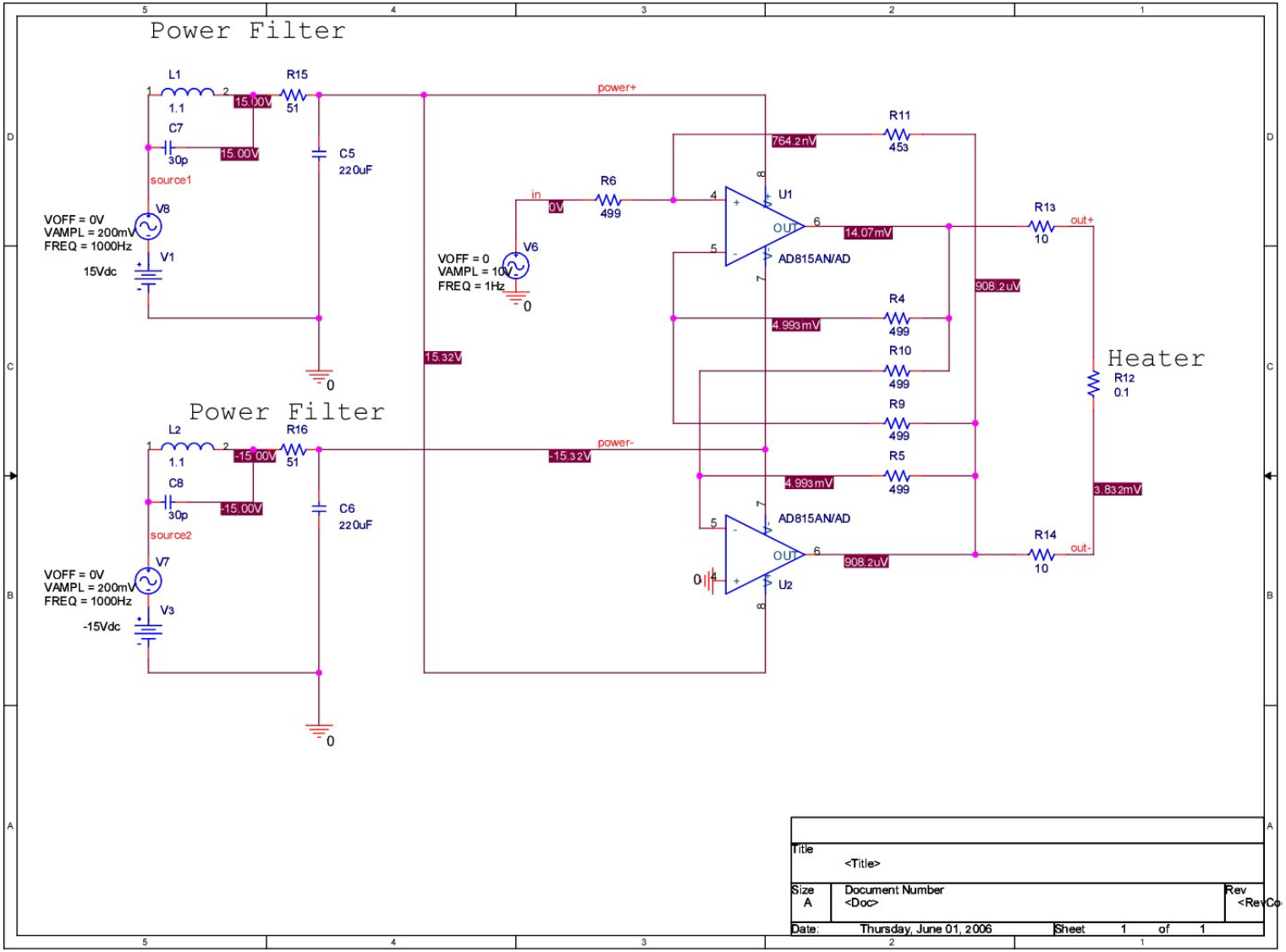

Current Through Shorted Heater

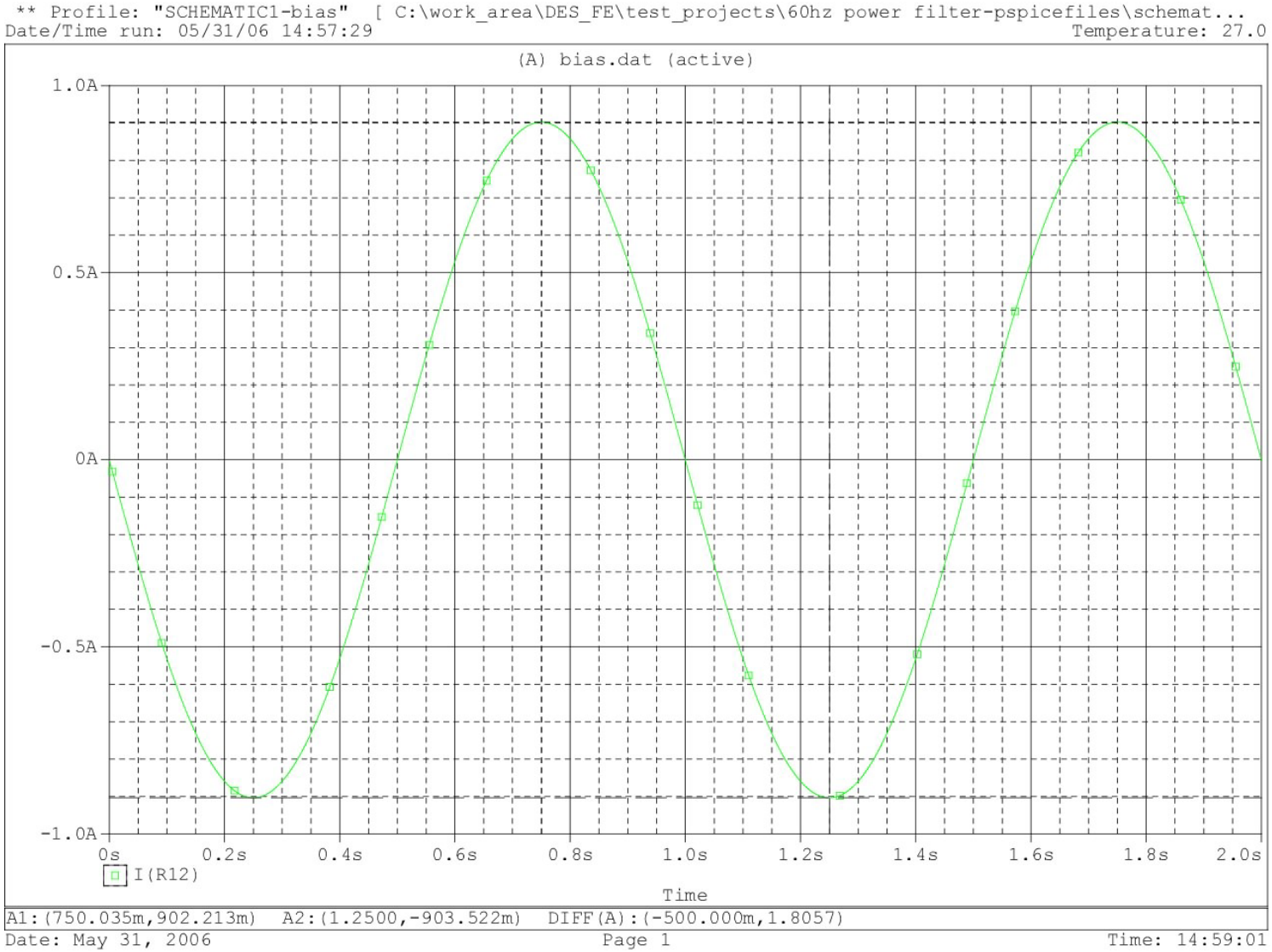

KEPCO Power Supply

FEATURED PRODUCT - SERIES HSF

RA 19-4B — Two 350W and two 150W HSF plug-ins

The Kepco HSF series of hot-swappable plug-in power supplies are designed to be combined in an N+1 fault-tolerant power system. Built-in forced current sharing and or-ing diodes are provided for this purpose. HSF may also be used independently as a multi-output power supply.

There are plug-in HSF modules in four sizes ranging from 50 watts to 350 watts. They mount in various combinations using the rack adapters described on page 65.

The 50W and 100W models are available in a "1U" configuration mounted sideways so that up to 4 units may be mounted in the RA 19-1U housing. See page 66.

The front panel of each plug-in HSF module contains an on-off switch and a "V d-c on" light. When HSF modules are paralleled, the module with the highest voltage setting automatically becomes the "master" (indicated by the front panel "master on" light). The other units are slaves, track the voltage setting of the master and equally share the load current. The front panel voltage adjustment trimmer provides adjustment of the output voltage. A pair of test points provide access at the front panel to measure the voltage.

This KEPCO product is backed by a 5-YEAR WARRANTY

AN ISO 9001 COMPANY

KEPCO.

THE POWER SUPPLIER™ SINCE 1946

HSF MODEL TABLE

MODEL	OUTPUT VOLTS	ADJUSTMENT RANGE	OVP SETTING (VOLTS)	OUTPUT CURRENT AMPS 0-40,C	CURRENT[1] LIMIT (AMPS)	SW RIPPLE mV typ	SW RIPPLE mV max	NOISE (spike) mV max
50 WATT MODELS								
HSF 5-10	5	4.5-5.5	6.5~7.5	0-10	10.5~12.0	30	60	<120
HSF 12-4.2	12	11.4-12.6	13.7~15.7	0-4.2	4.4~5.1	35	70	<190
HSF 15-3.4	15	13.5-16.5	17.0~19.0	0-3.4	3.6~4.1	45	90	<220
HSF 24-2.1	24	22.5-25.5	27.0~30.5	0-2.1	2.2~2.6	50	100	<310
HSF 48-1	48	45.0-51.0	53.5~60.0	0-1	1.1~1.3	60	150	<350
100 WATT MODELS								
HSF 5-20	5	4.5-5.5	6.5~7.5	0-20	21.0~24.0	30	65	<120
HSF 12-8.3	12	11.4-12.6	13.7~15.7	0-8.3	8.7~10.0	35	70	<190
HSF 15-6.6	15	13.5-16.5	17.0~19.0	0-6.6	7.0~8.0	40	80	<220
HSF 24-4.2	24	22.5-25.5	27.0~30.5	0-4.2	4.4~5.2	50	110	<310
HSF 28-3.5	28	26.5-29.5	32.0~35.0	0-3.5	3.7~4.2	60	140	<330
HSF 48-2	48	45.0-51.0	53.5~60.0	0-2	2.1~2.4	80	220	<530
150 WATT MODELS								
HSF 5-30	5	4.5-5.5	6.5~7.5	0-30	32.0~36.0	30	60	<120
HSF 12-12	12	11.4-12.6	13.7~15.7	0-12	13.0~15.0	35	70	<190
HSF 15-10	15	13.5-16.5	17.0~19.0	0-10	11.0~13.0	40	80	<220
HSF 24-6	24	22.5-25.5	27.0~30.5	0-6	6.3~7.5	50	110	<310
HSF 28-5	28	26.5-29.5	32.0~35.0	0-5	5.3~6.1	60	140	<330
HSF 48-2.8	48	45.0-51.0	53.5~60.0	0-2.8	3.0~3.5	80	220	<530
350 WATT MODELS								
HSF 3.3-70	3.3	2.65-3.5	4.0~30.0[2]	0-70	73.0~84.0	30	50	<100
HSF 5-70	5	4.0-5.5	4.0~30.0[2]	0-70	73.0~84.0	30	50	<100
HSF 12-30	12	9.6-13.2	4.0~30.0[2]	0-30	31.5~36.0	40	70	<150
HSF 15-24	15	12.0-16.5	4.0~30.0[2]	0-24	25.2~28.8	40	70	<175
HSF 24-16	24	19.2-26.5	4.0~30.0[2]	0-16	16.8~19.2	60	100	<200
HSF 28-13	28	22.4-30.8	4.0~30.0[2]	0-13	13.6~15.6	60	100	<200
HSF 48-7.5	48	38.4-52.8	4.0~30.0[2]	0-7.5	7.8~9.0	60	100	<300

(1) Current limit is a rectangular type, not foldback.
(2) OVP Setting = % tracking above output.

KEPCO, INC. • 131-38 Sanford Avenue • Flushing, NY 11352 USA • Tel: (718) 461-7000 • Fax: (718) 767-1102
Email: hq@kepcopower.com • www.kepcopower.com/hsf.htm

Filter Capacitors

Type AFK –55 °C to 105 °C

SMT Aluminum Electrolytic Capacitors - Lowest E.S.R., 105 °C

Low Impedance and Long-Life for Filtering, Bypassing and Power Supply Decoupling

Type AFK Capacitors are the best and by a wide margin. With 40% to 60% lower impedance, 30% to 50% smaller case size and more than twice the life compared to low-ESR type AFC, the Type AFK also excels at cold performance down to –55 °C. In addition, this terrific, low-impedance performance approaching low-ESR tantalum capacitors is at a significant cost savings compared to tantalum. The vertical cylindrical cases facilitate automatic mounting and reflow soldering into the same footprint of like-rated tantalum capacitors except without the need for voltage derating.

Highlights

- +105 °C, Up to 5000 Hour Load Life
- Capacitance Range: 3.3 µF to 6800 µF
- Voltage Range: 6.3 Vdc to 100 Vdc

Specifications

Operating Temperature: –55 °C to +105 °C
Rated Voltage: 6.3, 10, 16, 25, 35, 50, 63, 80 & 100 Vdc
Capacitance: 3.3 µF to 6800 µF
Capacitance Tolerance: ±20% @ 120 Hz and +20 °C
Leakage Current: 0.01 CV or 3µA @ +20 °C, after two minutes (whichever is greater)

Ripple Current Multiplier:

Frequency	50/60 Hz	120 Hz	1 kHz	10 kHz	100 kHz
	0.70	0.75	0.90	0.95	1.00

Dissipation Factor:

6.3V	10 V	16 V	25 V	35 V	50 V	63 V	80 V	100 V
0.26	0.19	0.16	0.14	0.12	0.1	0.08	0.08	0.07

Add 0.02 per 1000 µF for values greater that 1000 µF

Life Test: 2000 h @ 105 °C, 4.0 — 10.0 mm dia.
5000 h @ 105 °C, 12.5 — 18.0 mm dia.
Δ Capacitance ±30%
DF: ≤ 200% of limit
DCL: ≤ 100% of limit

Shelf Test: 1000 h @ 105 °C
Δ Capacitance ±30%
DF: ≤ 200% of limit
DCL: ≤ 100% of limit

AFK Series Marking

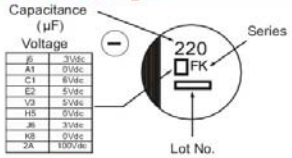

Outline Drawing

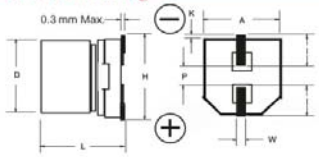

Case Dimensions

Case Code	D ± .05	L	A ± 0.2	H (max)	I (ref)	W	P (ref)	K (mm)
B	4.0	5.8 ±0.3	4.3	5.5	1.8	0.65 ±0.1	1.0	0.35 +0.15/-0.20
C	5.0	5.8 ±0.3	5.3	6.5	2.2	0.65 ±0.1	1.5	0.35 +0.15/-0.20
D	6.3	5.8 ±0.3	6.6	7.8	2.4	0.65 ±0.1	1.8	0.35 +0.15/-0.20
X6	.3	7.7 ±0.3	6.6	7.8	2.4	0.65 ±0.1	1.8	0.35 +0.15/-0.20
E	8.0	6.2 ±0.3	8.3	9.5	3.4	0.65 ±0.1	2.2	0.35 +0.15/-0.20
F	8.0	10.2 ±0.3	8.3	10.0	3.4	0.90 ±0.3	3.1	0.70 ±0.20
G	10.0	10.2 ±0.3	10.3	13.0	3.5	0.90 ±0.3	4.6	0.70 ±0.20
H	12.5	13.5 ±0.5	13.5	15.0	4.7	0.90 ±0.3	4.4	0.70 ±0.30
P	16.0	16.5 ±0.5	17.0	19.0	5.5	1.2 ±0.3	6.7	0.70 ±0.30
R	18.0	16.5 ±0.5	19.0	21.0	6.7	1.2 ±0.3	6.7	0.70 ±0.30

CDE Cornell Dubilier•1605 E. Rodney French Blvd.•New Bedford, MA 02744•Ph: (508)996-8561•Fax: (508)996-3830• www.cde.com

Some Related Links

- SP-4 Surge Protector
  - http://www.control-concepts.com/prod_isSuperTrac.asp
- Filter 9312 Neve T1530 EQ Inductor
  - http://www.sowter.co.uk/
- Isolation Amplifier AD215
  - http://www.analog.com/UploadedFiles/Data_Sheets/210891627ad215.pdf
- High Output Differential Driver AD815
  - http://www.analog.com/UploadedFiles/Data_Sheets/450123999AD815_c.pdf

Estimated Hardware Cost

- Heater Control Channel - ~$500.00
- 6-Channel Heater Control Board - ~$4,500.00
- Two Control Boards (12 Channels) - ~$9,000.00 (considering we will find a crate at home)
- Power Supply - ~$3,000.00
- Cabling - ~$500.00
- Miscellaneous - ~$500.00
- **Total Cost - ~$13,000.00**

Time Estimate

- Parts Procurement – 6 … 8 weeks (in parallel with some other works)
- Making Parts for PCB Design – 1 week
- Schematic Design – 1 week
- PCB Design – 2 weeks
- PCB Manufacturing – 1 week fast turnaround
- Cable Manufacturing – 1 week
- Board Assembly – 1 week
- Board Debugging – 1 week
- System Assembly and Testing – 1 week
- Installation – 1 week
- Contingency – 2 weeks
- **Total Time Estimate – 10 … 12 weeks**