REVISIONS				
ZONE	LTR	DESCRIPTION	DATE	APPROVED
	A	SEE SHT #1	4-29-68	
	B	SEE SHT #1	4-22-68	TG
	C-D	SEE SHEET 1		
	E	SEE SHEET 1		
	F	SEE SHT 1	2-2-71	JW
	G	SEE SHT 1		
B8	H	ADDED NOTE TO SECT. C-C	7-23-71	JW

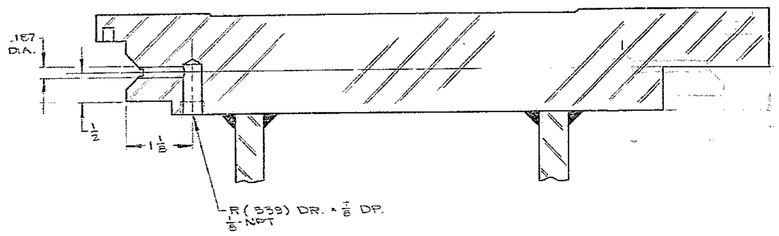

SECT. B-B
SCALE: FULL
ROTATED 85° CCW
(4) PLC'S. 90° APART

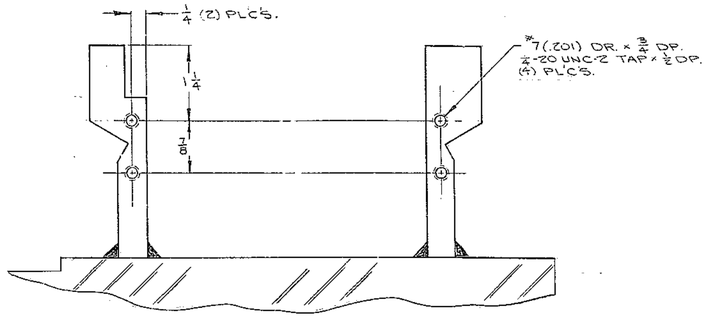

SECT. D-D
SCALE: FULL
ROTATED 17°-20' CW
TYP. (4) PLC'S.

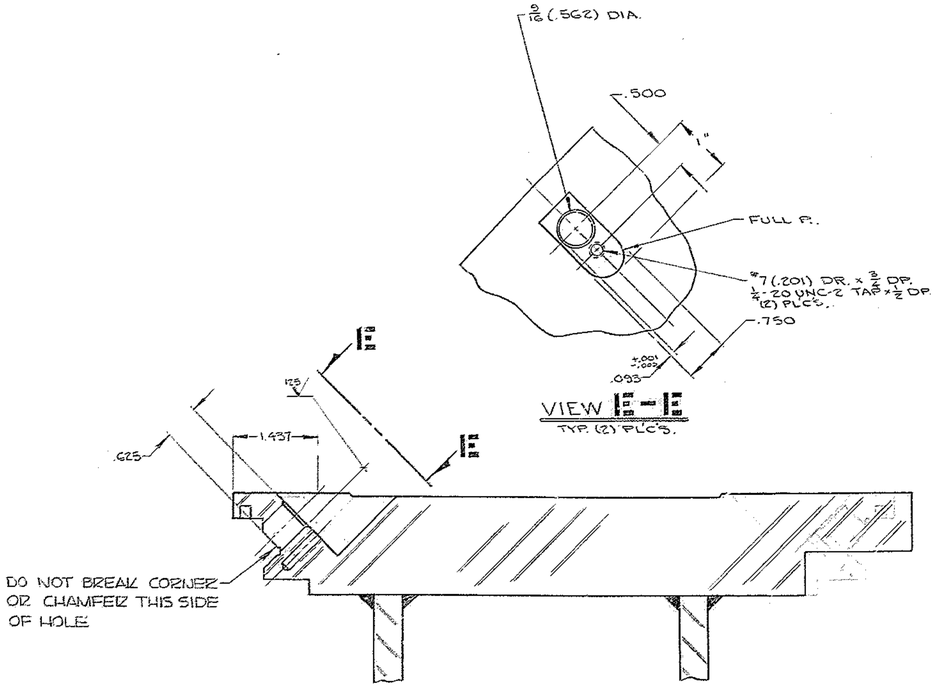

VIEW E-E
TYP. (2) PLC'S.

SECT. C-C
SCALE: FULL
ROTATED 80° CCW
(2) PLC'S. 180° APART

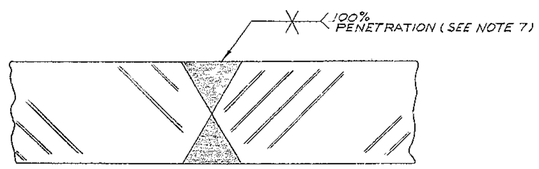

SECT F-F
SCALE: FULL
ROTATED 5° CCW
TYP (3) PLCS.

WESTERN GEAR CORPORATION
CONSTRUCTION PROJECTS DEPARTMENT
APPROVED FOR PROCUREMENT
DATE

NEXT ASSY-CH2150.600E002 (W.G. N 103083)
REF. FILE 1702
2244-R1 (KPNO)
1209

FIND NO.	PART NO.	DESCRIPTION	QTY	MATERIAL	CODE IDENT

LIST OF MATERIAL (LM)

LIMITS ON MACHINED DIMENSIONS EXCEPT AS NOTED
ANGULAR = ± 1° 0'
LINEAR:
.X = ± .1 .XXX = ± .010
.XX = ± .03 FRACTIONAL = ± 1/32
BREAK ALL SHARP EDGES
MATERIAL

150 IN. STELLAR TELESCOPE MOUNTING

Western GEAR CORPORATION — HEAVY MACHINERY DIVISION, EVERETT, WASHINGTON

DRAWN	J. MILLER	5-27-68
CHECK	GH	5-30-68
ENGR		

NON-ROTATING CAGE MOUNT

W.G.N 103 271
APPROVED

SIZE	CODE IDENT NO.		REV
E	16603	2150.600E011	X

SCALE FULL | WT | LB | SHEET 2 OF 2