REVISIONS				
ZONE	LTR	DESCRIPTION	DATE	APPROVED
	A	REV PER NORA APP PRINT	10/3/68	
	B	ADDED P/N'S 31 & 32 ADDED "MOBILPLEX EP-23" TO NOTE 3	3/11/71	JW
	C	ADDED P/N'S 29 & 33 AS BUILT	10-4-71	
	D	DELETE P/N'S & NOTE 1	5-26-72	LDS
	E	DELETE P/N 18 AND REL. P/N 27	11/13/73	LDS
	F	ADDED NOTE 4	7/14/74	

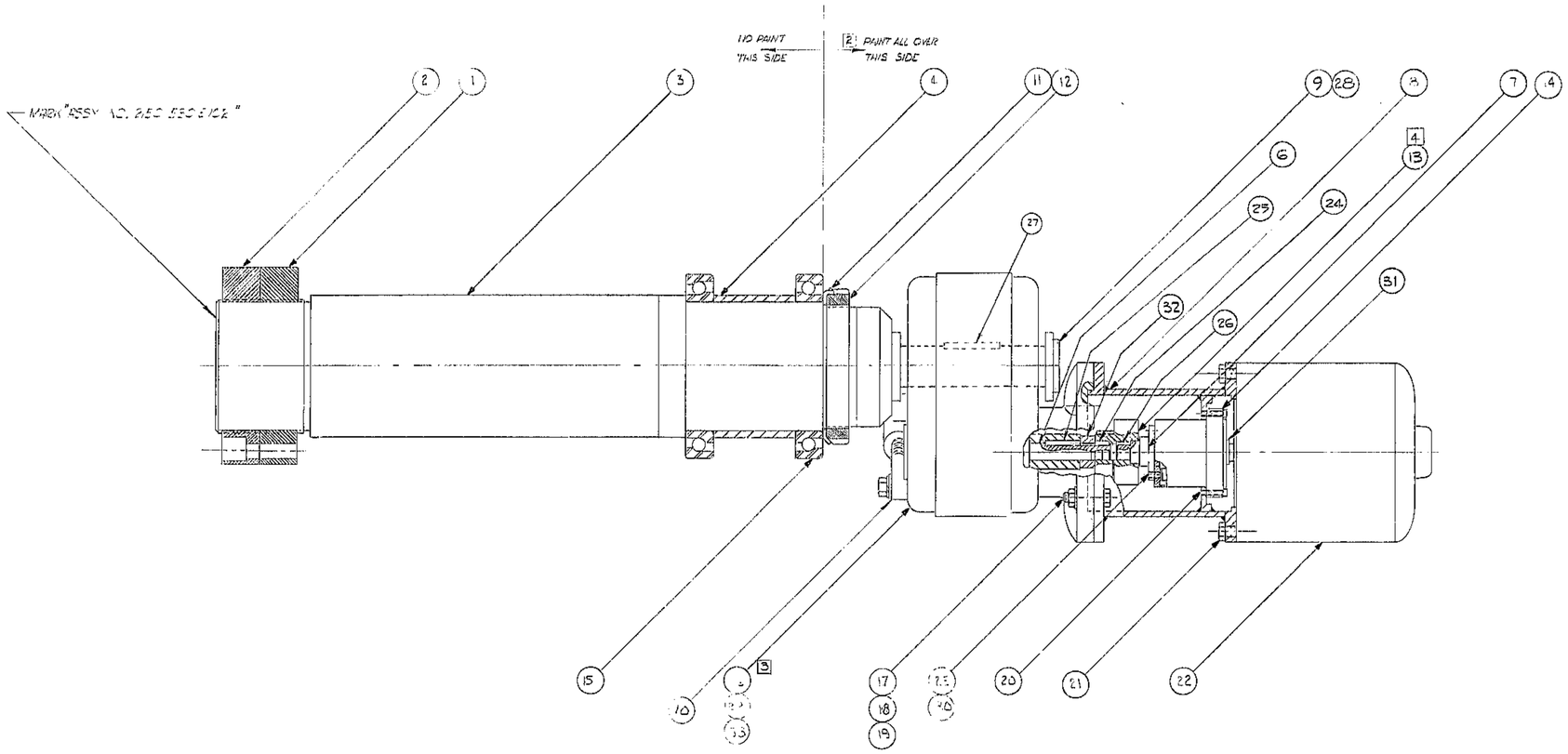

NOTES:

1. EXACT LENGTH OF THIS SPACER TO BE MACHINED @ ASSY TO ATTAIN AN AXIAL PRELOAD OF 15000 LBS. COMPRESSION WHEN OUTER RACES ARE METAL TO METAL WITH SPACER
2. APPLY SECOND COAT OF PRIME PAINT AND TWO COATS OF FINISH ENAMEL PER W.G.C. SPEC 511 AS SHOWN
3. PACK WITH MOBILPLEX EP-23 OR EQUIVALENT
4. ADJUST TO 8.3 FT LB

SEE BIM: 2150.530A102 (W.G.C. 102,937)

NEXT ASSY: 2150.500E002 (W.G.N. 102966)

1193

FIND NO.	PART NO.	DESCRIPTION	QTY	MATERIAL	CODE IDENT

LIST OF MATERIAL (LM)

LIMITS ON MACHINED DIMENSIONS EXCEPT AS NOTED
ANGULAR = ± 1° 0'
LINEAR:
.X = ± .1 .XXX = ± .010
.XX = ± .03 FRACTIONAL = ± 1/32
BREAK ALL SHARP EDGES
MATERIAL

150 IN. STELLAR TELESCOPE MOUNTING

DRAWN R. SANDERS 3-4-68
CHECK [illegible]
ENGR

W.G.N 102,939
APPROVED

WESTERN GEAR CORPORATION
HEAVY MACHINERY DIVISION
EVERETT, WASHINGTON

SHAFT DRIVE ASSEMBLY

SIZE	CODE IDENT NO.		REV
E	16603	2150.530E102	F

SCALE 1/2 WT 114 LB SHEET 1 OF 1

CONSTRUCTION PROJECTS DEPARTMENT
APPROVED FOR PROCUREMENT
GR DATE 10-15-68