REVISIONS				
ZONE	LTR	DESCRIPTION	DATE	APPROVED
	A	REVISED PER AURA APP PRINT	10-3-68	
3A/2A	A	NEXT ASSY WAS 530 E002 (WGE 107590) IS 500 E002 (WGE 102966)		
C8	B	ASSY NO. WAS 2150.530E102	6-2-71	JW
	C	DELETED P/N 5 AND NOTE 1	5-26-72	L.D.S

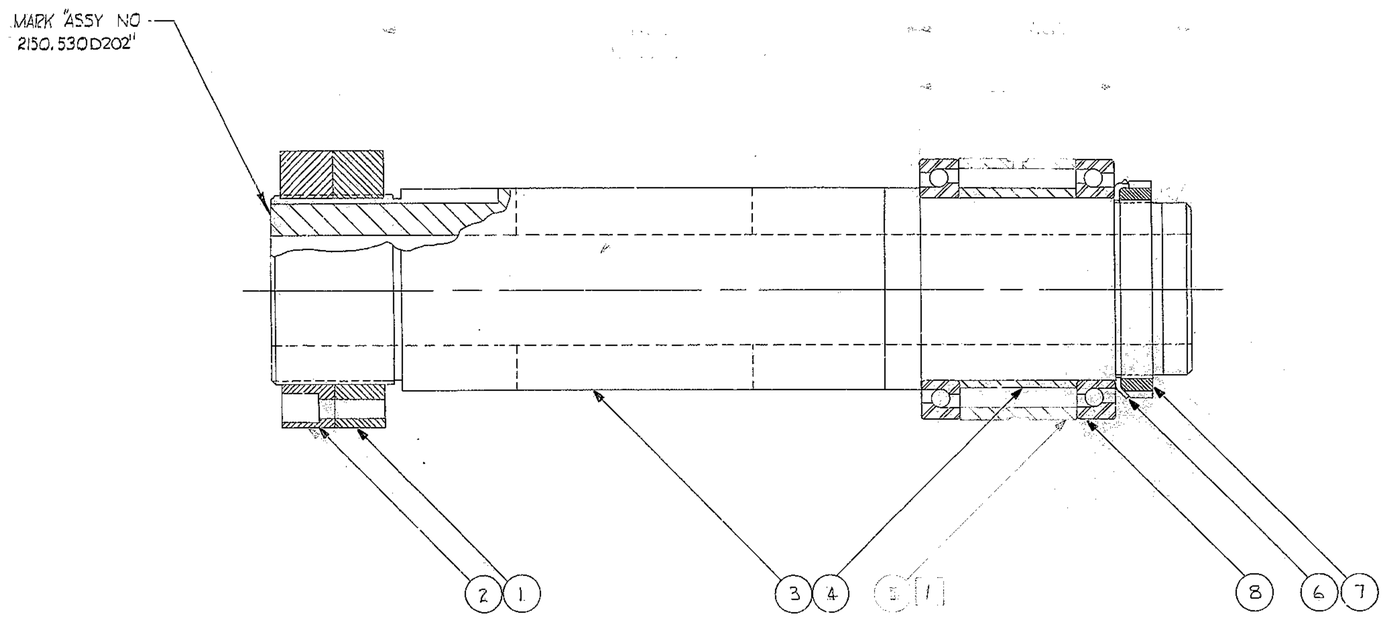

NOTES :

1 EXACT LENGTH OF THIS SPACER TO BE MACHINED @ ASSY TO ATTAIN AN AXIAL PRELOAD OF 15000 LBS COMPRESSION WHEN OUTER RACES ARE METAL TO METAL WITH SPACER

SEE B/M: 2150.530A202 (WGC 112,928)

NEXT ASSY: 2150.500E002 (WGE 102966)

REF. FILE 1193

FIND NO.	PART NO.	DESCRIPTION	QTY	MATERIAL	CODE IDENT

LIST OF MATERIAL (LM)

LIMITS ON MACHINED DIMENSIONS EXCEPT AS NOTED
ANGULAR = ± 1° 0'
LINEAR:
.X = ± .1 .XXX = ± .010
.XX = ± .03 FRACTIONAL = ± 1/32
BREAK ALL SHARP EDGES
MATERIAL

150 IN. STELLAR TELESCOPE MOUNTING

DRAWN R. SANDERS 3-3-68
CHECK FWH 73068
ENGR

W.G.E 107,590
APPROVED

Western GEAR CORPORATION
HEAVY MACHINERY DIVISION
EVERETT, WASHINGTON

BEARING SHAFT ASSEMBLY

SIZE D | CODE IDENT NO. 16603 | 2150.530D202 | REV C

SCALE 1/2 WT 42 LB SHEET 1 OF 1

WESTERN GEAR CORPORATION
CONSTRUCTION PROJECTS DEPARTMENT
APPROVED FOR PROCUREMENT
GR DATE 10-15-68