REVISIONS				
ZONE	LTR	DESCRIPTION	DATE	APPROVED
	A	REVISED PER AURA APPD. PRINT	11-3-68	
	B	DELETED OUTER BEARING SPACER	5-26-70	LDS
	C	ADDED 1/4-20 NC TAP HOLES TO VIEW B-B	4-12/73	LDS

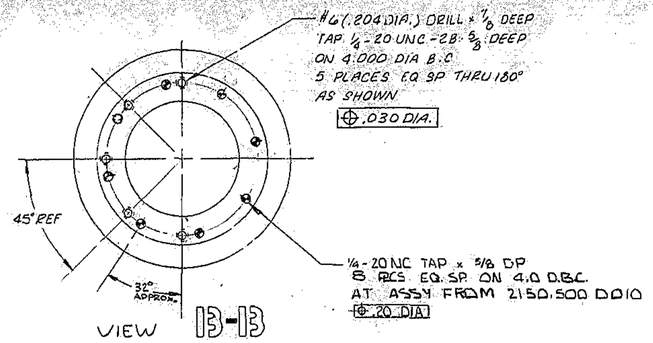

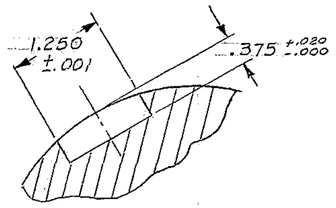

SECTION A-A
SCALE: 12"=1'

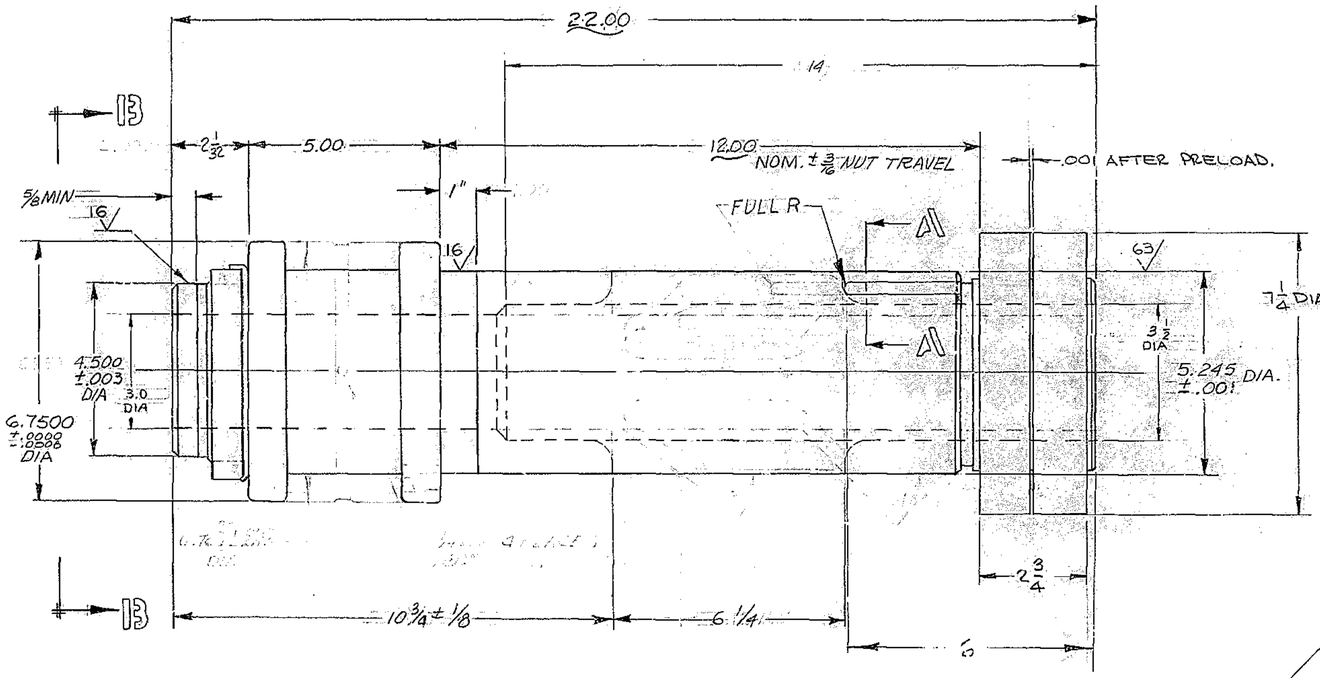

SCALE: 6"=1'

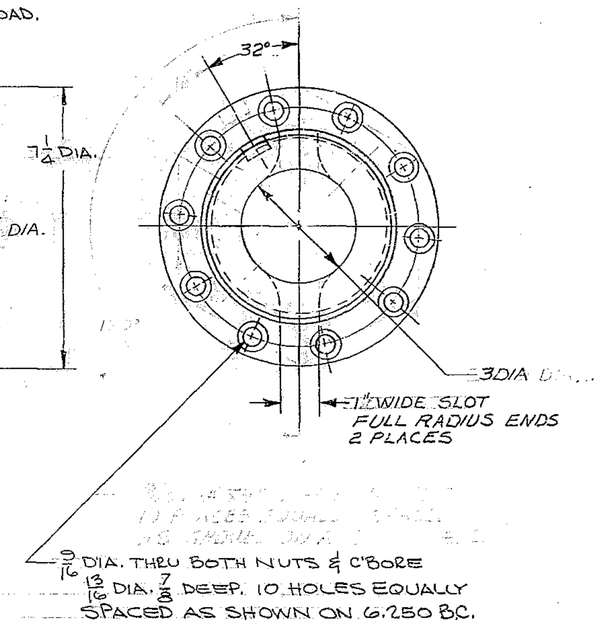

NOTE:-
1. ALL DIMENSIONS IN INCHES.

NEXT ASSY: 2150.500E001 (WGN 102801)

1193

FIND NO.	PART NO.	DESCRIPTION	QTY	MATERIAL	CODE IDENT

LIST OF MATERIAL (LM)

LIMITS ON MACHINED DIMENSIONS EXCEPT AS NOTED
ANGULAR = ± 1° 0'
LINEAR:
.X = ± .1 .XXX = ± .010
.XX = ± .03 FRACTIONAL = ± 1/32
BREAK ALL SHARP EDGES
MATERIAL

150 IN STELLAR TELESCOPE MOUNTING

Western GEAR CORPORATION
HEAVY MACHINERY DIVISION
EVERETT, WASHINGTON

DRAWN J. MOLINA 1-25-68
CHECK 1-30-68
ENGR

OUTLINE, BEARING SHAFT

WGE 107,501
APPROVED

SIZE	CODE IDENT NO.		REV
D	16603	2150.530D201	C

SCALE VARIOUS WT LB SHEET 1 OF 1

FABRICATION TOLERANCES EXCEPT AS NOTED
UP TO 10 INCHES ± 1/16
10 TO 50 INCHES ± 1/8
50 INCHES AND ABOVE ± 1/4

WESTERN GEAR CORPORATION
CONSTRUCTION PROJECTS DEPARTMENT
APPROVED FOR PROCUREMENT
G.R. DATE 10-15-68