REVISIONS				
ZONE	LTR	DESCRIPTION	DATE	APPROVED
	A	REVISED PER AURA APPD PRINT	10-2-68	

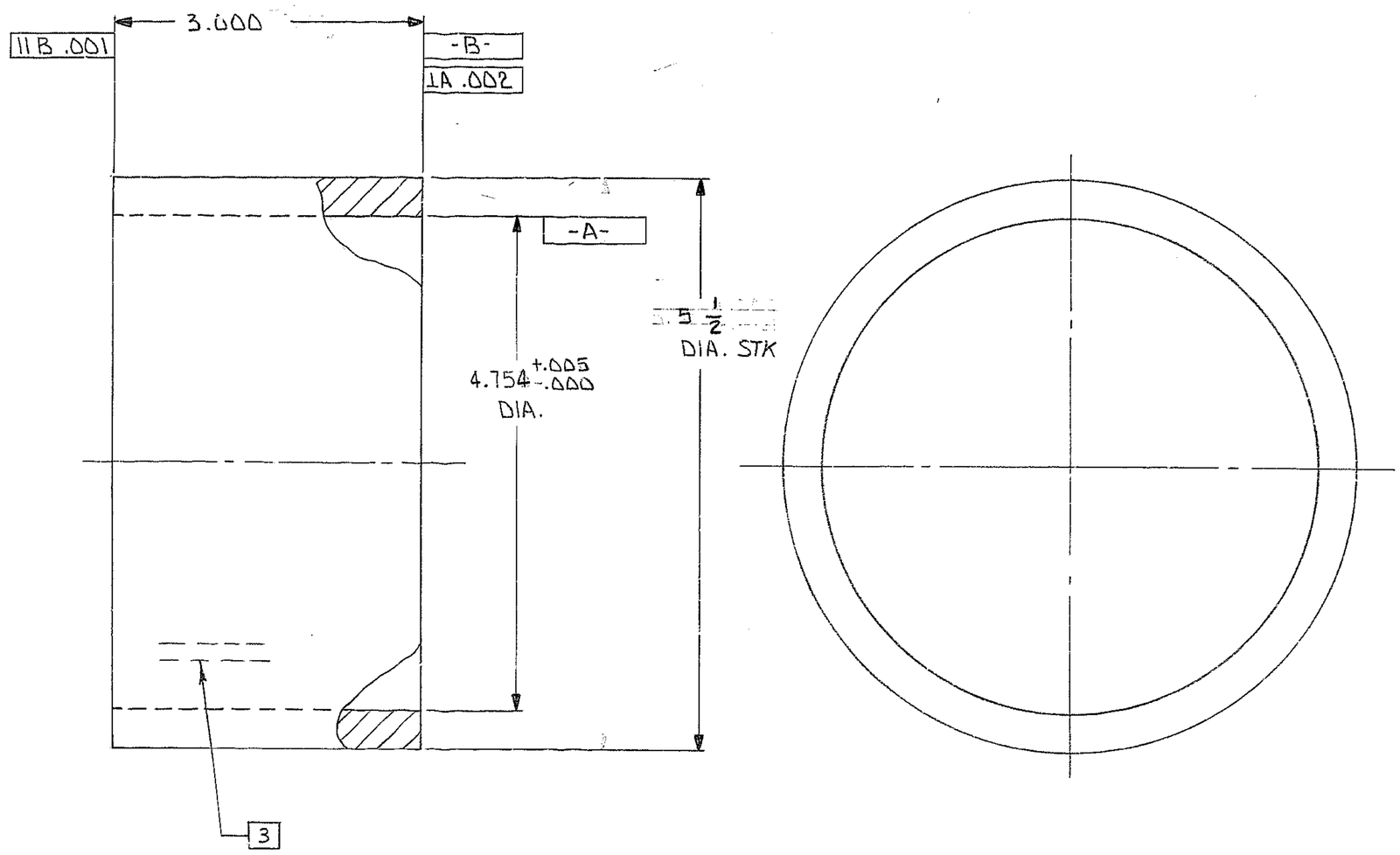

NOTES:

1. ALL DIMENSIONS IN INCHES
2. FINISH 125√ ALL OVER EXCEPT AS NOTED
3. STAMP PART NO "2150.530C005"

NEXT ASSY: 2150.530E102 (W.G.N 102,939)
2150.530D202 (W.G.E 107,590)

REF. FILE 1193

FIND NO.	PART NO.	DESCRIPTION	QTY	MATERIAL	CODE IDENT

LIST OF MATERIAL (LM)

WESTERN GEAR CORPORATION
CONSTRUCTION PROJECTS
DEPARTMENT
APPROVED FOR
PROCUREMENT
GR: DATE 10-15-68

LIMITS ON MACHINED DIMENSIONS
EXCEPT AS NOTED
ANGULAR = ± 1° 0'
LINEAR:
.X = ± .1 .XXX = ± .010
.XX = ± .03 FRACTIONAL = ± 1/32
BREAK ALL SHARP EDGES
MATERIAL
TUBE 5 1/2 O.D X 1/2 THK X 3 1/8 LG, STL - MT 1015

150 IN. STELLAR TELESCOPE MOUNTING

DRAWN	R. SANDERS	3-24-68
CHECK	R.W.M.	7-30-68
ENGR		

W.G.D 107,414
APPROVED

western GEAR CORPORATION
HEAVY MACHINERY DIVISION
EVERETT, WASHINGTON

SPACER, INNER
DRIVE AND BEARING SHAFT

SIZE	CODE IDENT NO.		REV
C	16603	2150.530C005	A

SCALE 1/1 WT 25 LB SHEET 1 OF 1

P1336