REVISIONS				
ZONE	LTR	DESCRIPTION	DATE	APPROVED
	A	REVISED PER AURA APPD PRINT	10/2/68	

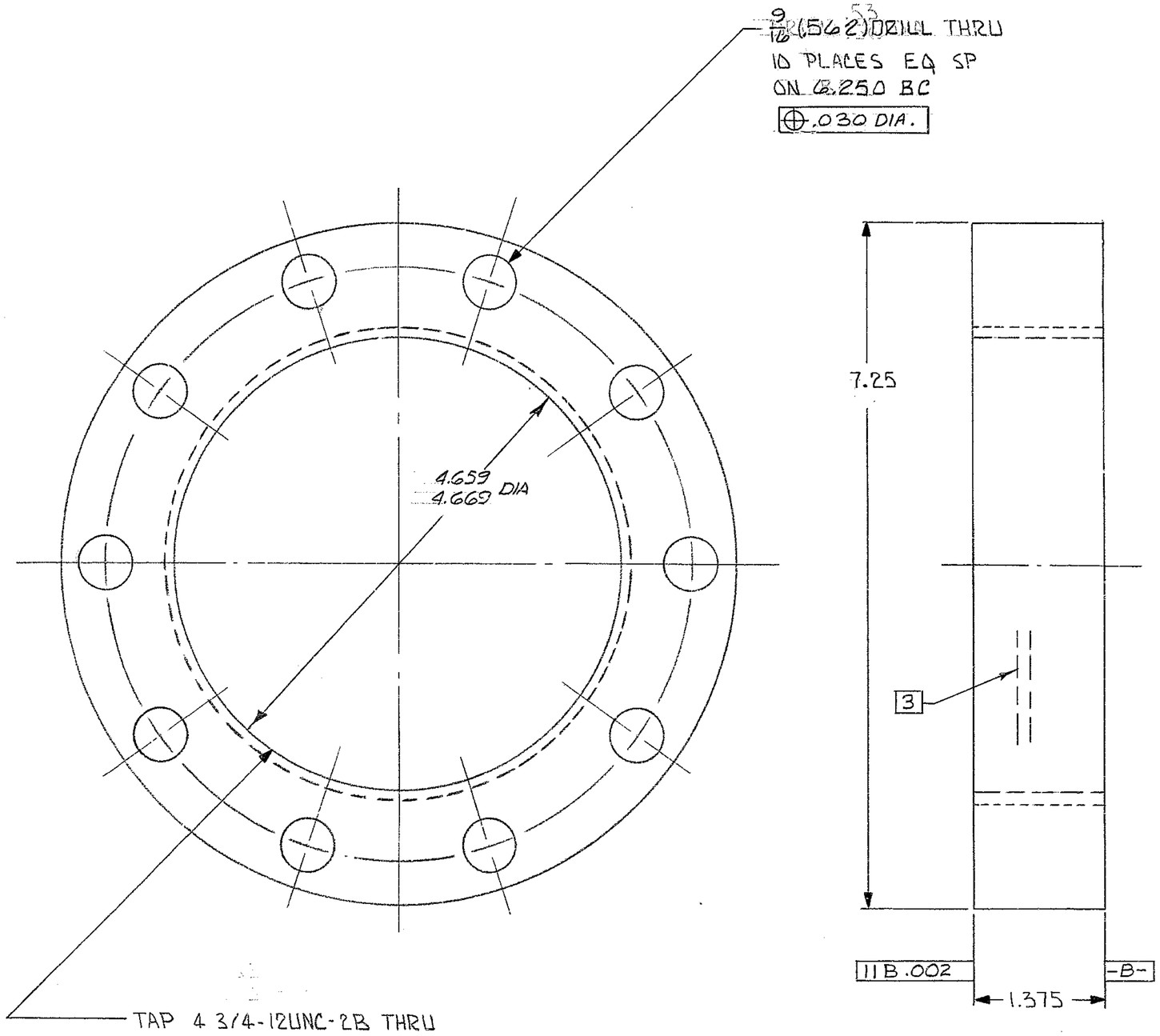

NOTES:
1. ALL DIMENSIONS IN INCHES
2. FINISH 125√ ALL OVER
3. STAMP PART NO. "2150.530C004"

NEXT ASSY: 2150.530E102 (W.G.N 102,939)
2150.530D202 (W.G.E 107,590)

REF. FIG. 1193

FIND NO.	PART NO.	DESCRIPTION	QTY	MATERIAL	CODE IDENT

LIST OF MATERIAL (LM)

LIMITS ON MACHINED DIMENSIONS
EXCEPT AS NOTED
ANGULAR = ± 1° 0'
LINEAR:
.X = ± .1 .XXX = ± .010
.XX = ± .03 FRACTIONAL = ± 1/32

BREAK ALL SHARP EDGES

MATERIAL
STL BAR AISI C1018
OR EQUIV.
7½ DIA X 1½ THK

DRAWN	R. SANDERS	3-11-68
CHECK	F. W. M.	7-30-68
ENGR		

W.G.D 107,412

APPROVED

western GEAR CORPORATION
HEAVY MACHINERY DIVISION
EVERETT, WASHINGTON

NUT, INNER
DRIVE AND BEARING SHAFT

SIZE	CODE IDENT NO.		REV
C	16603	2150.530C004	A

SCALE 1/1 WT 25 LB SHEET 1 OF 1

WESTERN GEAR CORPORATION
CONSTRUCTION PROJECTS
DEPARTMENT
APPROVED FOR
PROCUREMENT
G.R. DATE 10-15-68

P1336