| REVISIONS | | | | |
|---|---|---|---|---|
| ZONE | LTR | DESCRIPTION | DATE | APPROVED |
| | A | REVISED PER AURA APPD PRINT 1/15/70 & CHANGED MATL OF PC NO. 2 | 1/22/70 | G.R. |
| | B | REV PER AURA 2-25-70 CHG'D. NOTE 4. ADD. NOTE 7 | 4/1/70 | G.R. |
| | C | AS BUILT 2288 5.5 | 7-9-79 | 7.8 |

| ITEM | QTY | MATERIAL | DESCRIPTION | WEIGHT |
|---|---|---|---|---|
| 1 | 1 | STL ASTM A36 | PL 8 X 1/2 X 75 | 80 |
| 2 | 1 | STL REF | DWG 2150.500B035 | 7 |
| 3 | 1 | STL AISI C-1018 | ROD 2 3/4 DIA X 1 1/4 | 3 |

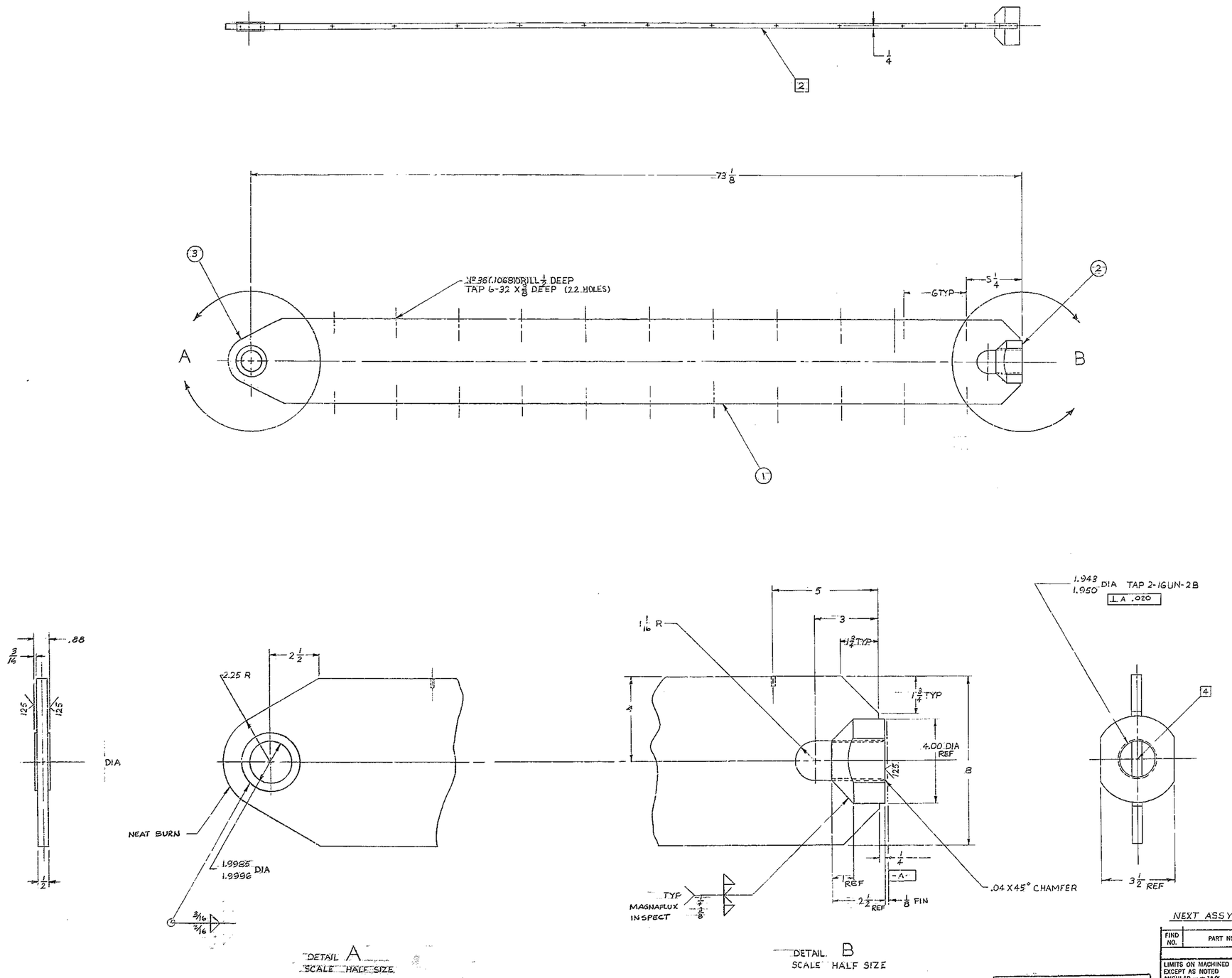


NOTES

1. FABRICATION TOLERANCES EXCEPT AS NOTED
   0 TO 10 INCHES ± 1/16
   10 TO 50 INCHES ± 1/8
   50 TO – INCHES ± 1/4
2. THIS PART TO BE STRAIGHT TO WITHIN 1/16
3. THERMAL STRESS RELIEVED AFTER WELDING AND BEFORE MACHINING PER WGC SPEC # 510
4. THIS CENTER TO BE LOCATED TO WITHIN .005 OF PIECE NO. 1
5. WELD PER WGC SPEC # 752 APP T1
6.
7. ALL DIMENSIONS IN INCHES
8. APPLY ONE COAT OF PRIME PAINT ALL OVER PER WGC SPEC # 511
9. NOTIFY CUSTOMER THAT PART IS READY FOR STRAIN GAGE INSTL.

NEXT ASSY 2150.500E002 (W.G. N-102966)

REF. FILE 1189

| FIND NO. | PART NO. | DESCRIPTION | QTY | MATERIAL | CODE IDENT |
|---|---|---|---|---|---|

LIST OF MATERIAL (LM)

WESTERN GEAR CORPORATION
CONSTRUCTION PROJECTS DEPARTMENT
APPROVED FOR PROCUREMENT
Gene Russo DATE 1/23/70

LIMITS ON MACHINED DIMENSIONS EXCEPT AS NOTED
ANGULAR = ± 1° 0'
LINEAR:
X = ± .1 XXX = ± .010
XX = ± .03 FRACTIONAL = ± 1/32
BREAK ALL SHARP EDGES
MATERIAL
SEE L of M

150" STELLAR TELESCOPE MTG

DRAWN WAIDNER 12-15-69
CHECK
ENGR

W.G. N103277
APPROVED

WESTERN GEAR CORPORATION
HEAVY MACHINERY DIVISION
EVERETT, WASHINGTON

OUTER FIN -
UPPER RING & SECONDARY ASSY

SIZE E | CODE IDENT NO. 16603 | 2150.500E030 | REV C

SCALE 1/4 & NOTED | WT | LB | SHEET 1 OF 1