REVISIONS				
ZONE	LTR	DESCRIPTION	DATE	APPROVED
	A	REVISED PER AURA APPD DRWG OF 1/13/70 WITH ADDITION OF VIEW F-F & NOTE 9	1/19/70	G.R.
	C	SEE SHT 1		

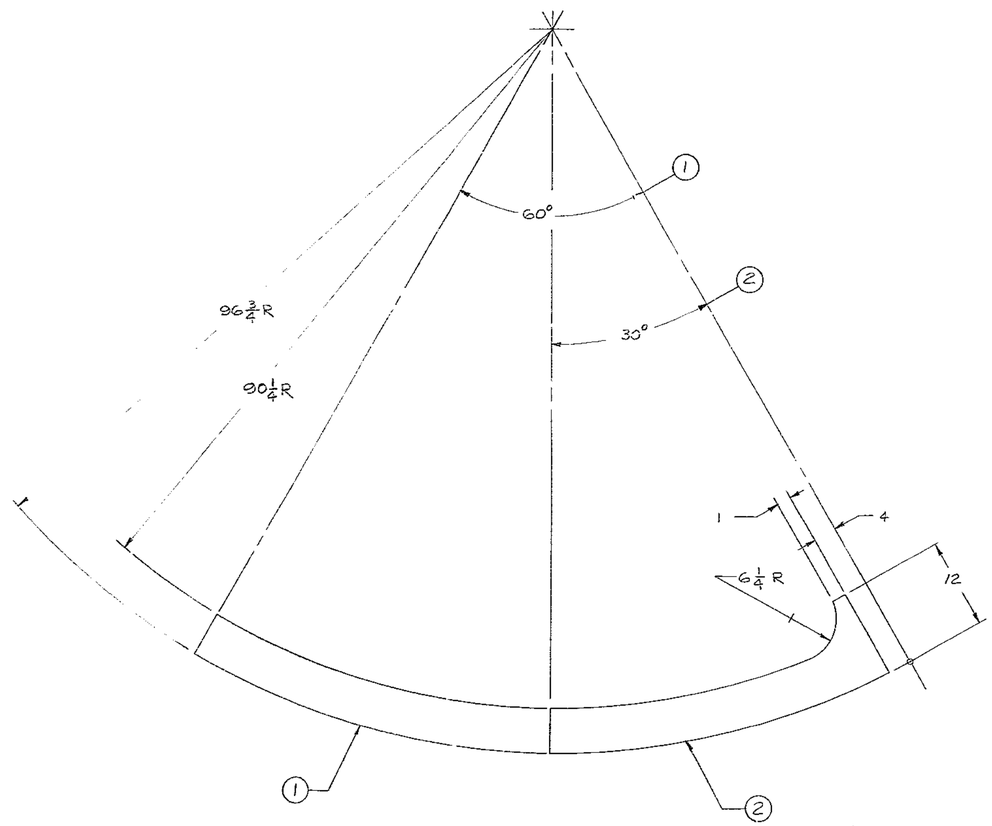

DETAIL PC. NO. 1 & 2

NOTE: PC. NO. 1 & 2 ARE THE SAME EXCEPT PC. NO. 2 IS LONGER AT ONE END, AS SHOWN

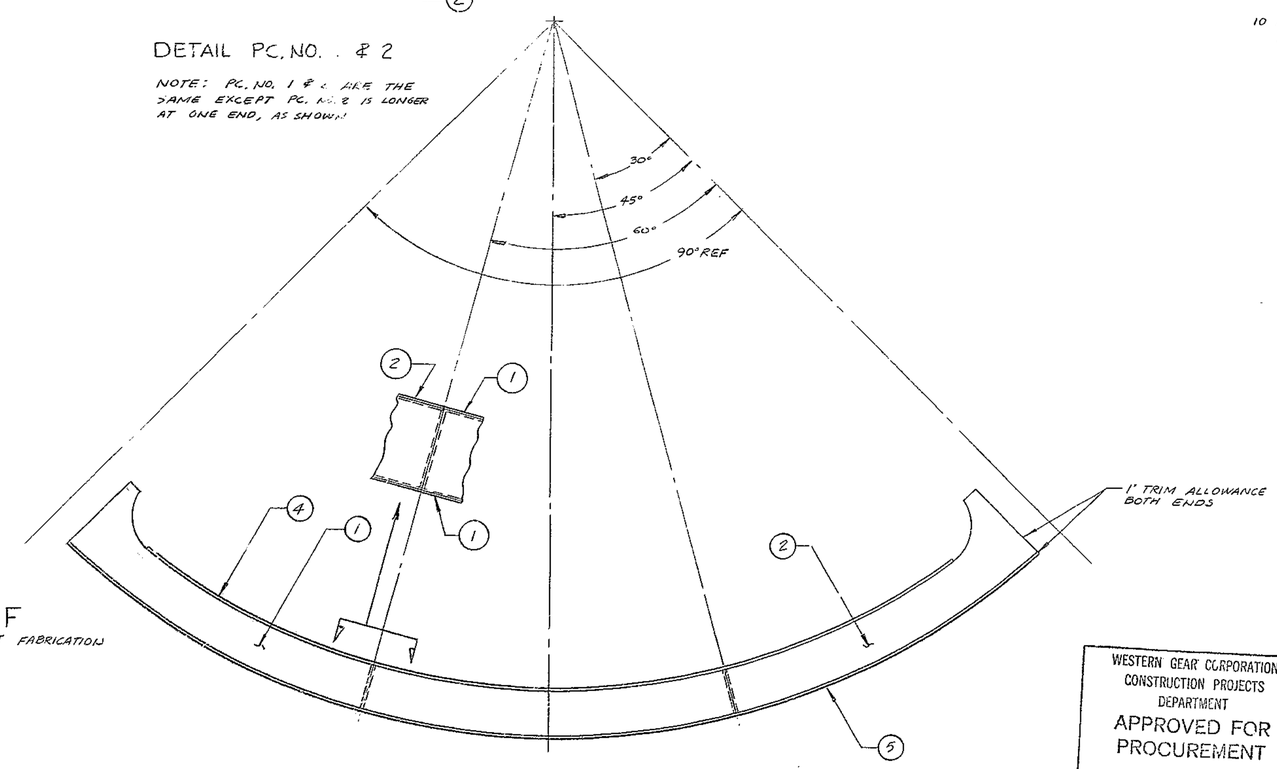

VIEW F-F
TYP QUADRANT FABRICATION

NOTES:

1. ALL DIMENSIONS ARE IN INCHES
2. FAB TOLERANCES EXCEPT AS NOTED
   UP TO 10" ± 1/16
   10" TO 50" ± 1/8
   50" & OVER ± 1/4
3. WELD PER W.G.C. SPEC # 752 APP T1
4. THERMAL STRESS RELIEVE AFTER WELDING & BEFORE MACHINING PER W.G.C. SPEC # 510 – FIRST STRESS RELIEVE INDIVIDUAL QUADRANTS THEN STRESS RELIEVE AGAIN AS AN ENTIRE RING BEFORE MACHINING.
5. APPLY ONE COAT OF PRIME PAINT ALL OVER PER W.G.C. SPEC # 511 IMMEDIATELY AFTER STRESS RELIEVING & CLEANING
6. TO BE BORED WITH OUTER RING 2150.500E003 TO MAINTAIN CONCENTRICITY OF INNER RING & OUTER RING BORES TO WITHIN .002
7. ALL SURFACES MARKED √ TO BE 125√ EXCEPT AS NOTED
8. SURFACE -B- IS DEFINED AS ALL FOUR SURFACES APPROX 90° APART
9. RING IS TO BE FABRICATED IN INDIVIDUAL QUADRANTS AS SHOWN IN VIEW F-F.
10. REFER TO DWG 2150.500E036 (W.G. N103279) FOR MACHINING WITH OUTER RING DWG. 2150.500E003 (W.G.E 300084)

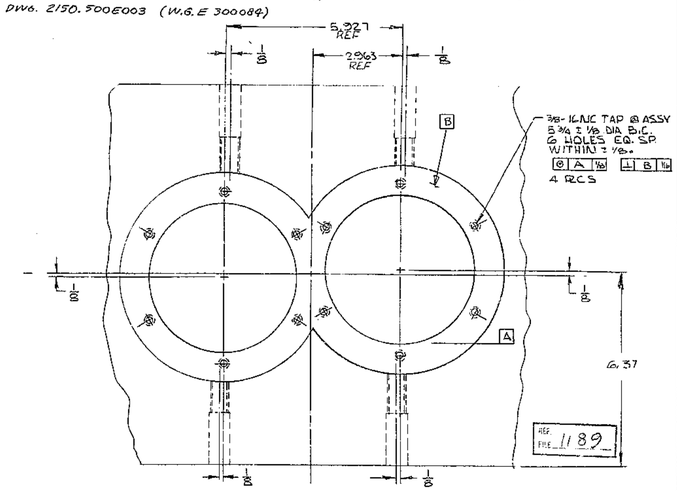

VIEW G-G ROT. 45 CCW AND H-H ROT. 135° CW. – SEE VIEW G-G FOR OTHER DIMS.

NEXT ASSY: 2150.500E002 (W.G.N102966)

FIND NO.	PART NO.	DESCRIPTION	QTY	MATERIAL	CODE IDENT

LIST OF MATERIAL (LM)

LIMITS ON MACHINED DIMENSIONS EXCEPT AS NOTED
ANGULAR = ± 1° 0'
LINEAR:
.X = ± .1 .XXX = ± .010
.XX = ± .03 FRACTIONAL = ± 1/32
BREAK ALL SHARP EDGES
MATERIAL
SEE L OF M

150" STELLAR TELESCOPE MTG

DRAWN J. GRUVER 12-16-69
CHECK
ENGR

W.G.N 103278
APPROVED

western GEAR CORPORATION
HEAVY MACHINERY DIVISION
EVERETT, WASHINGTON

INNER RING – UPPER RING & SEC ASSY

SIZE E | CODE IDENT NO. 16603 | 2150.500E020 | REV D

SCALE 1/8 | WT | LB | SHEET 2 OF 2

WESTERN GEAR CORPORATION
CONSTRUCTION PROJECTS DEPARTMENT
APPROVED FOR PROCUREMENT
Gene Rouse DATE 1/19/70