THIS DOCUMENT CONTAINS INFORMATION PROPRIETARY TO WESTERN GEAR CORPORATION. ALL DESIGN, MANUFACTURING, REPRODUCTION, USE, PATENT, AND SALES RIGHTS REGARDING THE SAME ARE HEREBY EXPRESSLY RESERVED BY WESTERN GEAR CORPORATION. THIS DOCUMENT IS SUBMITTED FOR REFERENCE PURPOSES ONLY AND SHALL NOT BE DISCLOSED TO ANY UNAUTHORIZED PERSON OR INCORPORATED INTO ANY OTHER PROJECT.

REVISIONS				
ZONE	LTR	DESCRIPTION	DATE	APPROVED
	A	SEE SHT 1	2-20-70	
	B	SEE SHT 1	3-3-70	
8-D	D	WAS (6) 3/8-16 HOLES TO (12) HOLES	7-7-72	S.T.
	E	AS BUILT 2288 C.S.	9-19-78	

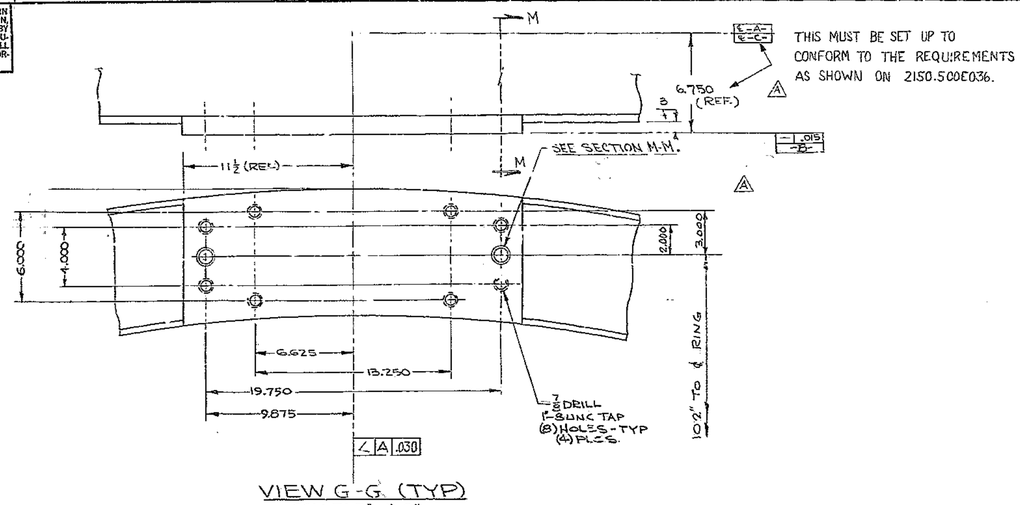

VIEW G-G (TYP)
SCALE: 3"=1'-0"

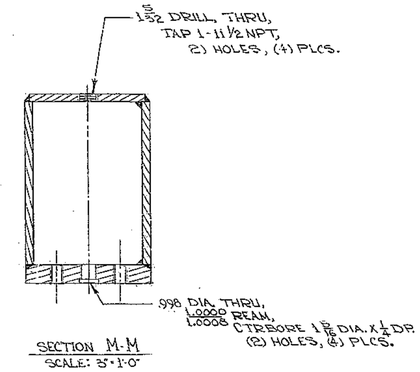

SECTION M-M
SCALE: 3"=1'-0"

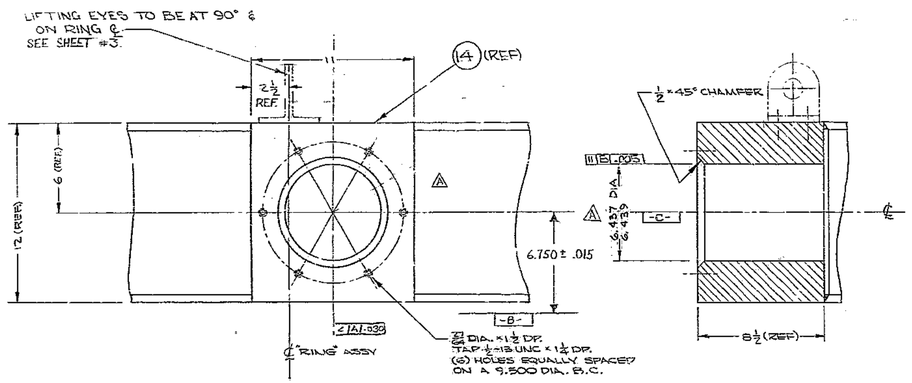

VIEW H-H (TYP)
SCALE: 3"=1'-0"

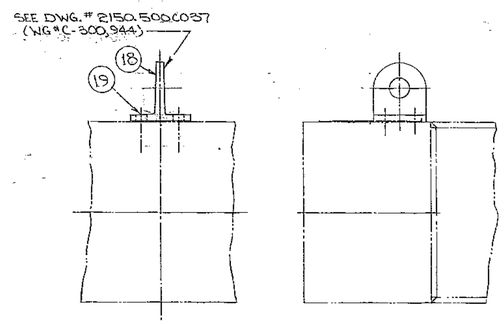

DETAIL "L" (TYP 4 PLCS.)
SCALE: 3"=1'-0"

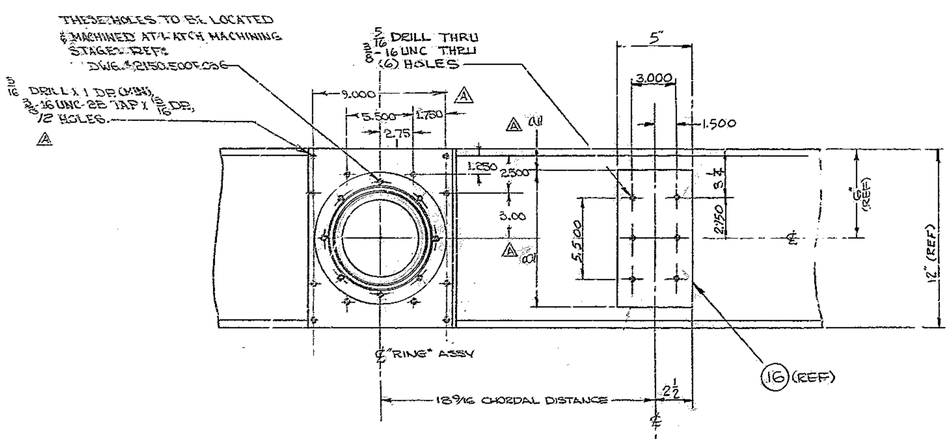

VIEW J-J
SCALE: 3"=1'-0"

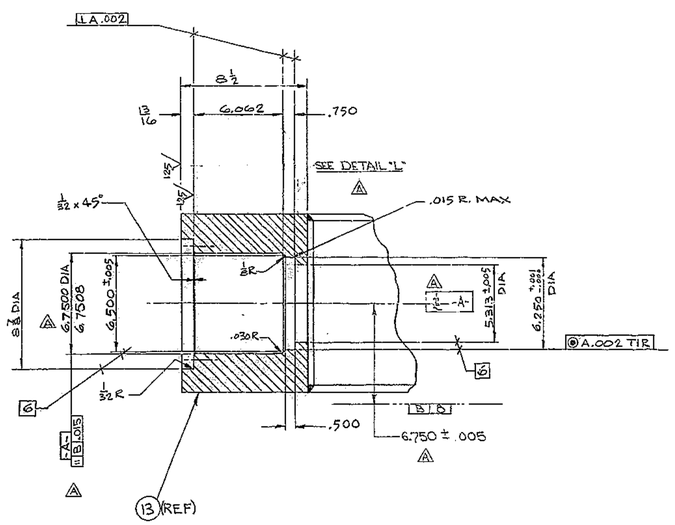

SECT. K-K
SCALE: 3"=1'-0"

(ALL DIMENSIONS ARE TO BE REFERENCE FOR THIS SECTION. ALL BORING TO BE IN CONJUNCTION WITH 2150.500E020 AS SHOWN ON 2150E036.)

NEXT ASSY: 2150.500E002 (WGN102966)

REF. FILE 1189

FIND NO.	PART NO.	DESCRIPTION	QTY	MATERIAL	CODE IDENT

LIST OF MATERIAL (LM)

LIMITS ON MACHINED DIMENSIONS EXCEPT AS NOTED
ANGULAR = ± 1° 0'
LINEAR:
.X = ± .1 .XX = ± .010
.XX = ± .03 FRACTIONAL = ± 1/32
BREAK ALL SHARP EDGES
MATERIAL

150' STELLAR TELESCOPE MTG.

Western GEAR CORPORATION — HEAVY MACHINERY DIVISION, EVERETT, WASHINGTON

DRAWN 7/2/69
CHECK 30-SEP 69
ENGR

UPPER RING GIRDER
UPPER RING & SECONDARY ASSY.

WGE300084
APPROVED

SIZE E | CODE IDENT NO. 16603 | 2150.500E003 | REV E
SCALE AS NOTED | WT — | LB | SHEET 4 OF 4

WESTERN GEAR CORPORATION
CONSTRUCTION PROJECTS DEPARTMENT
APPROVED FOR PROCUREMENT
Gene Russo DATE 1/20/70