THIS DOCUMENT CONTAINS INFORMATION PROPRIETARY TO WESTERN GEAR CORPORATION. ALL DESIGN, MANUFACTURING, REPRODUCTION, USE, PATENT, AND SALES RIGHTS REGARDING THE SAME ARE HEREBY EXPRESSLY RESERVED BY WESTERN GEAR CORPORATION. THIS DOCUMENT IS SUBMITTED FOR REFERENCE PURPOSES ONLY AND SHALL NOT BE DISCLOSED TO ANY UNAUTHORIZED PERSON OR INCORPORATED INTO ANY OTHER PROJECT.

REVISIONS

ZONE	LTR	DESCRIPTION	DATE	APPROVED
	A	SEE SHT. 1		
	B	SEE SHT. 1		
	D	SEE SHT. 4		S.T.
	E	AS BUILT 228B C.S.		RB

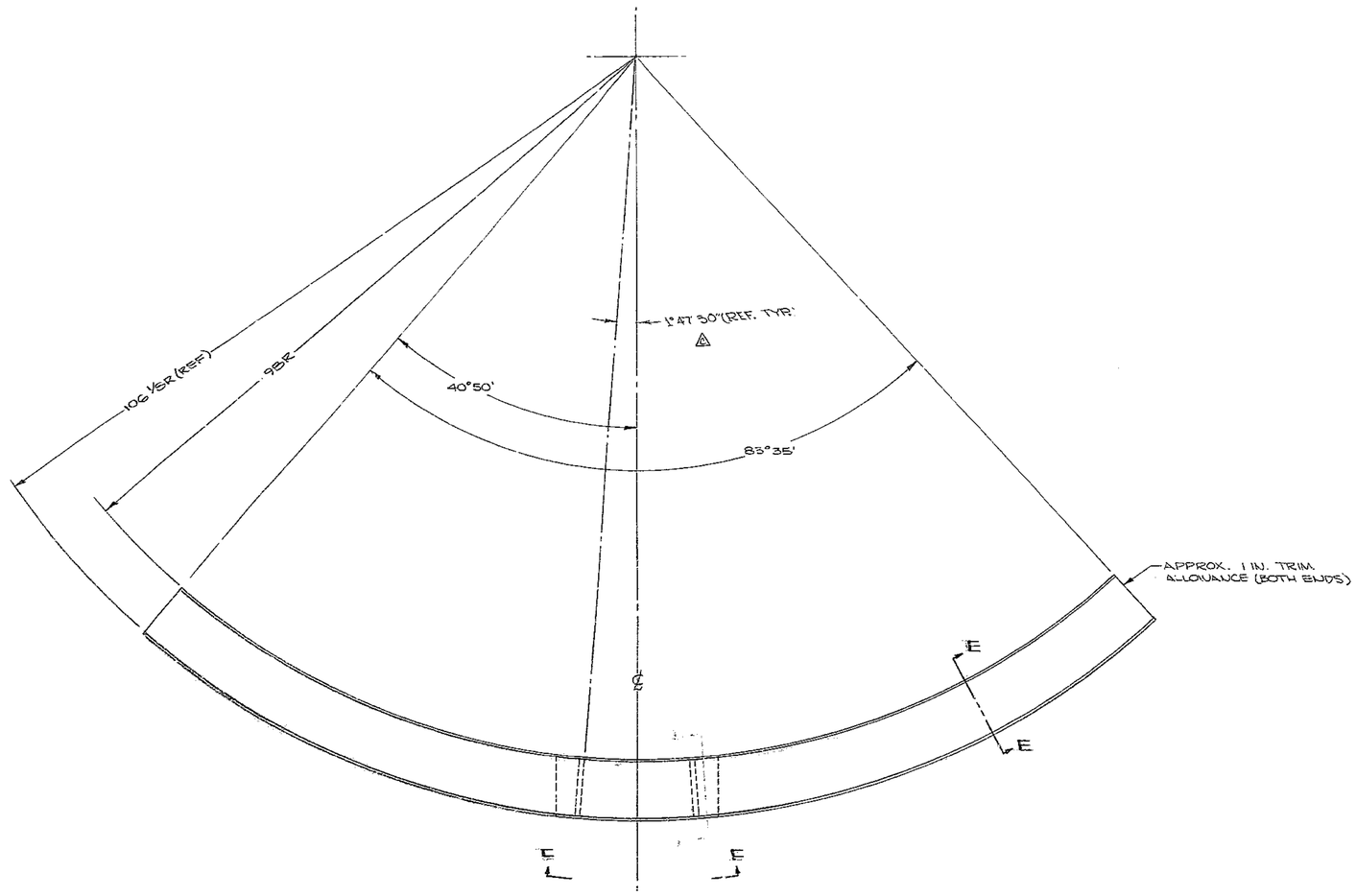

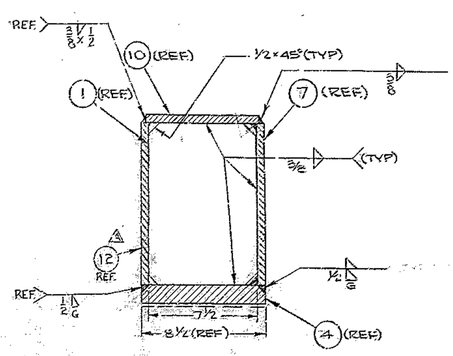

SECTION D-D
SCALE: 3" = 1'-0"

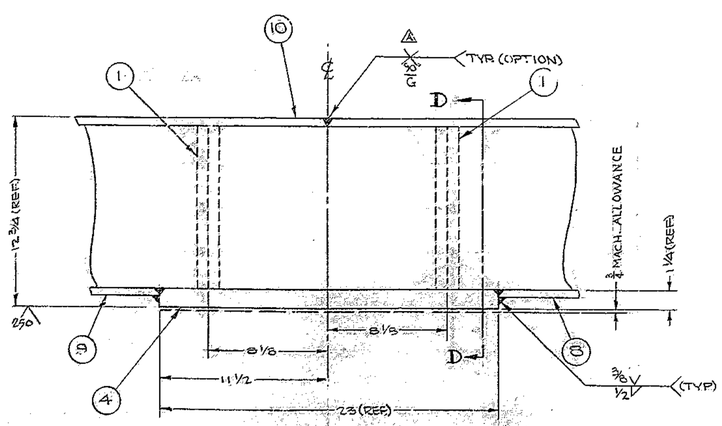

VIEW F-F
SCALE: 3" = 1'-0"

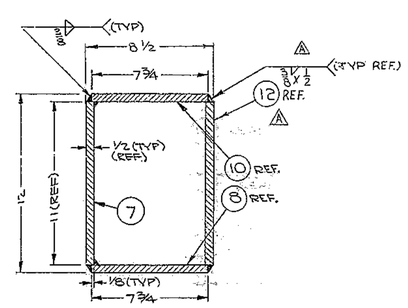

SECTION E-E
SCALE: 3" = 1'-0"

NEXT ASSY: 2150.500E002 (WGN 102966)

REF FILE 1189

FIND NO.	PART NO.	DESCRIPTION	QTY	MATERIAL	CODE IDENT

LIST OF MATERIAL (LM)

LIMITS ON MACHINED DIMENSIONS EXCEPT AS NOTED
ANGULAR = ± 1° 0'
LINEAR:
.X = ± .1 .XXX = ± .010
.XX = ± .03 FRACTIONAL = ± 1/32
BREAK ALL SHARP EDGES
MATERIAL

150" STELLAR TELESCOPE MTG.

DRAWN 6/27/69
CHECK 30-SEP-69
ENGR

WGE 300084
APPROVED

Western GEAR CORPORATION
HEAVY MACHINERY DIVISION
EVERETT, WASHINGTON

UPPER RING GIRDER
UPPER RING & SECONDARY ASSY.

SIZE	CODE IDENT NO.		REV
E	16603	2150.500E.003	E

SCALE 1/2" = 1'-0" UNLESS NOTED | WT 4543 LB | SHEET 2 OF 4

WESTERN GEAR CORPORATION
CONSTRUCTION PROJECTS DEPARTMENT
APPROVED FOR PROCUREMENT
Gene Russo DATE 11/20/70