THIS DOCUMENT CONTAINS INFORMATION PROPRIETARY TO WESTERN GEAR CORPORATION. ALL DESIGN, MANUFACTURING, REPRODUCTION, USE, PATENT, AND SALES RIGHTS REGARDING THE SAME ARE HEREBY EXPRESSLY RESERVED BY WESTERN GEAR CORPORATION. THIS DOCUMENT IS SUBMITTED FOR REFERENCE PURPOSES ONLY AND SHALL NOT BE DISCLOSED TO ANY UNAUTHORIZED PERSON OR INCORPORATED INTO ANY OTHER PROJECT.

REVISIONS

ZONE	LTR	DESCRIPTION	DATE	APPROVED
6-C	A	SHT 1: ADD. PC. #1. & ASSMB. WELDS TO SECT. A-A & B-B. ADD. OPTION WELD. SHT 2: ADD. PC. 2 & WELDS TO SECT. A-A & C-C. ADD. OPTION WELD. SHT. 4: ADD. LIFT LUG DETAIL (DET. L). OTHER REVS. APPD FOR CONST. PER APPD. AMRA PRINTS.	2-20-70	JD WE
	B	ADDED NOTE 9		
6F 6F 6A 8C	C	8/11: ADD. ITEM 18. NOTE 6: MOD. TO REF. DWG. # 2150.500E036. CHGD. TITLE ADD 0°-45°. SHT. 2: ADD 1'4"7'30; SHT. 3: ADD "6 REF", "[illegible]", "12 3/4 REF; ADD "1'4" TYP", "SEE SHT. 4", "100 R TYP" "3.25 TYP", "1.62 TYP", "2.50 TYP." & REF TO "3/4 TAPPED HOLES" SHT 4: CHGD. H-H & DET. L TO SHOW NEW LIFT EYE. ADD SECT M-M. B/W: ADD. ITEM #19. REVISED DWG. PER AMRA APPROVED PRINTS.	8/11	
	D	SEE SHT. 4	1-6-72	G.T.
	E	AS BUILT 22.66 F.S.	7-2-72	[illegible]

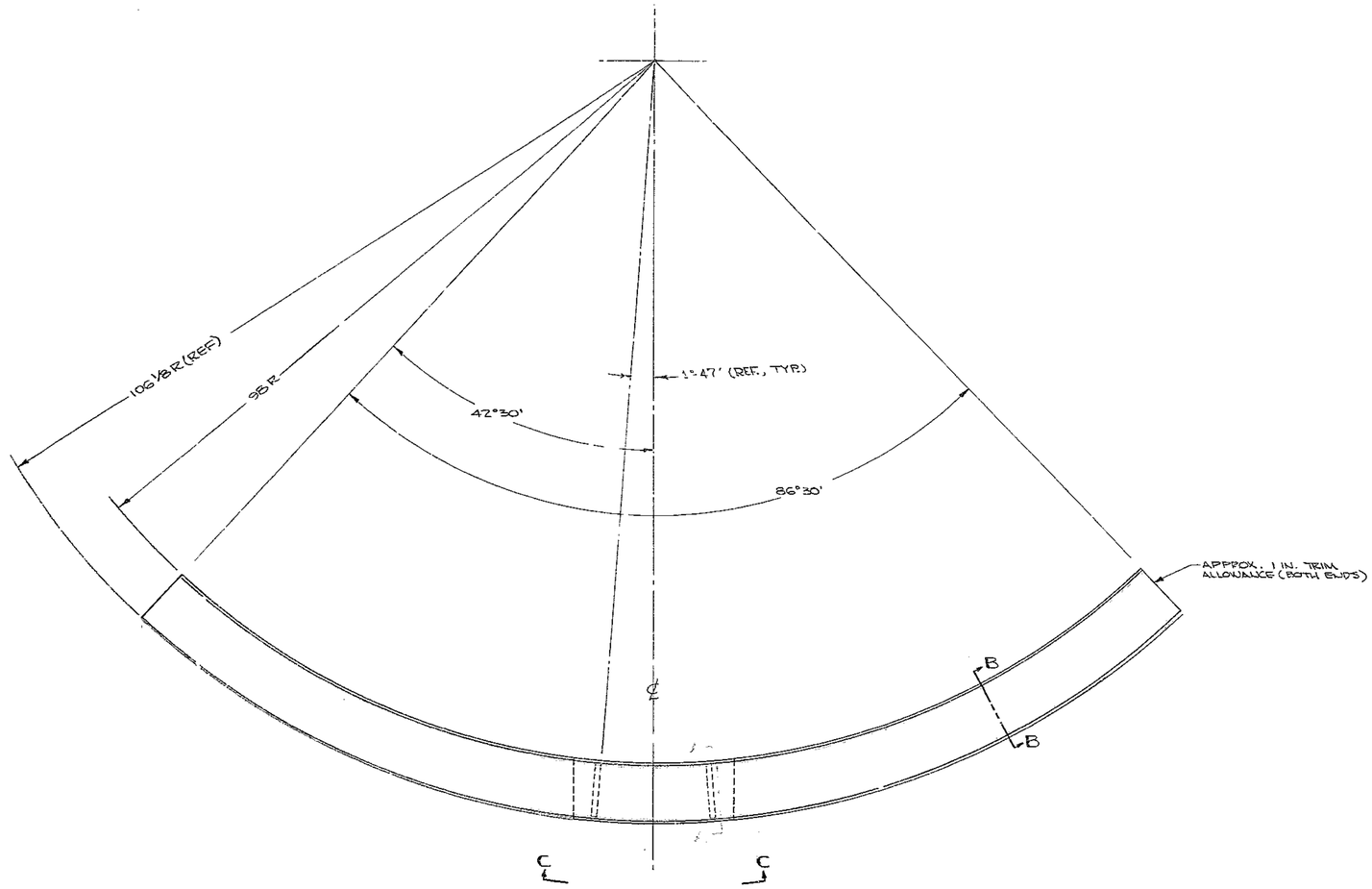

NOTES:

1. ALL DIMENSIONS ARE IN INCHES.
2. FAB TOLERANCES EXCEPT AS NOTED;
   UP TO 10" ± 1/16
   10" TO 50" ± 1/8
   50" & OVER ± 1/4
3. WELD PER W&C SPEC # 752 APPENDIX T1.
4. STRESS RELIEVE INDIVIDUAL QUADRANTS AFTER WELDING & TOTAL FAB. AFTER FINAL WELDING AND BEFORE MACHINING PER W&C SPEC #510.
5. APPLY ONE COAT OF PRIME PAINT ALL OVER PER W&C SPEC #511 IMMEDIATELY AFTER STRESS RELIEVING & CLEANING.
6. TO THE REQUIREMENTS SHOWN ON 2150.500E036, THIS PART TO BE BORED WITH INNER RING 2150.500E020 TO MAINTAIN CONCENTRICITY BETWEEN INNER RING & OUTER RING SHAFT BORES WITHIN .002 T.I.R.
7. 196" DIA TO BE ROUND WITHIN -0/+1/4; CONCENTRIC WITH P/N 2150.500E020 WITHIN 1/4.
8. SURFACE [B] IS DEFINED AS ALL FOUR MOUNTING SURFACES & IS TO BE USED AS A LOCATING SURFACE FOR [6]
9. MACHINE WITH DWG. N103278 PER MACHINE DWG. N103279.

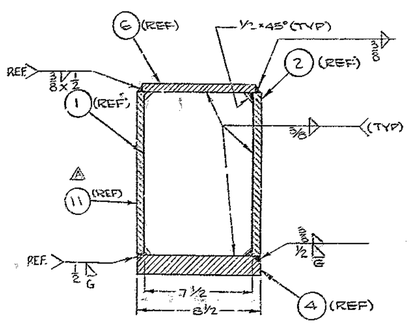

SECTION A-A
SCALE: 3" = 1'-0"

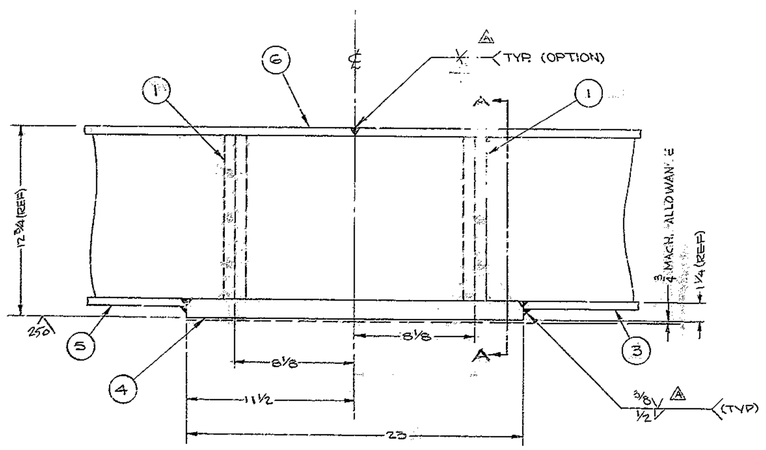

VIEW C-C
SCALE: 3" = 1'-0"

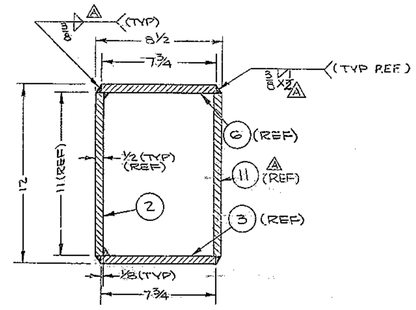

SECTION B-B
SCALE: 3" = 1'-0"

NEXT ASSY: 2150.500E002 (WGN102966)

FIND NO.	PART NO.	DESCRIPTION	QTY	MATERIAL	UNIT WT.	CODE IDENT
19		HEX. HD. CAPSCREW	16	5/8-10 NC-2A x 2 3/4 LG. (GR. 5)	7.5#	
18	2150.500C037 WG.C300,944	LIFTING LUG	4	SEE DWG.	46#	
17		PL 2 1/8 × 6 5/8 × 6 3/4	4	ASTM A36 STL	23#	
16		PL 5 × 1 × 9 1/4	1	ASTM A36 STL	4#	
15		PL 2 5/16 × 2 × 3 5/8	1	ASTM A36 STL	3#	
14		9 × 11 × 12	2	ASTM A36 STL	235#	
13		9 × 10 × 12	2	ASTM A36 STL	220#	
12		PL 11 × 1/2 × 155 1/2	2	ASTM A36 STL	240#	
11		PL 11 × 1/2 × 160 1/4	2	ASTM A36 STL	247#	
10		PL 34 1/2 × 1/2 × 143 1/2	2	ASTM A36 STL	209#	
9		PL 14 × 1/2 × 65	2	ASTM A36 STL	87#	
8		PL 14 × 1/2 × 68	2	ASTM A36 STL	92#	
7		PL 11 × 1/2 × 143 1/2	2	ASTM A36 STL	221#	
6		PL 37 × 1/2 × 148 1/2	2	ASTM A36 STL	216#	
5		PL 15 × 1/2 × 68 1/2	2	ASTM A36 STL	92#	
4		PL 9 1/2 × 2 × 23	4	ASTM A36 STL	69#	
3		PL 15 × 1/2 × 71	2	ASTM A36 STL	95#	
2		PL 11 × 1/2 × 148 1/2	2	ASTM A36 STL	226#	
1		PL 7 1/2 × 3/4 × 11	8	ASTM A36 STL	17#	

LIST OF MATERIAL (LM)

LIMITS ON MACHINED DIMENSIONS EXCEPT AS NOTED
ANGULAR = ± 1° 0'
LINEAR:
X = ± .1 XXX = ± .010
XX = ± .03 FRACTIONAL = ± 1/32
BREAK ALL SHARP EDGES
MATERIAL

150" STELLAR TELESCOPE MTG.

DRAWN	[illegible]	6/26/69
CHECK	[illegible]	30-SEP-69
ENGR		

WGE300084
APPROVED

REF. FILE 1189

WESTERN GEAR CORPORATION
CONSTRUCTION PROJECTS DEPARTMENT
APPROVED FOR PROCUREMENT
Gene Ruiz DATE 11/20/70

WESTERN GEAR CORPORATION
HEAVY MACHINERY DIVISION
EVERETT, WASHINGTON

UPPER RING GIRDER
UPPER RING & SECONDARY ASSY.

SIZE	CODE IDENT NO.		REV
E	16603	2150.500E003	E
SCALE 1/2" = 1'-0" AS NOTED	WT 4685 LB	SHEET 1 OF 4	