REVISIONS				
ZONE	LTR	DESCRIPTION	DATE	APPROVED
	A	REVISED PER AURA PRINT OF 11/3/70	11/3/70	[illegible]
	B	REVISED PER AURA PRINT 2-23-71		
	C	[illegible]		
	D	ADDED REF TO P/N 23; DELETED P/N'S 20 & 35 & ADDED NOTE; ADDED NOTE TO P/N 23 & SEC. L-L	7-8-71	
	E	REVISED PER AURA COMMENTS	7-19-71	JW
	F	SEE SHEET 1 REVISIONS	10-1-71	
	G	ADDED SEC. A-A CTIO ONLY & SEC. A-A KPNO ONLY SEE SHT. 1	7/21/72	
E-7	H	DELETED OUTER BEARING SPACER	9/26/72	LDS
F-5 E-6 D-4		9/26 WAS 9/6 ADDED TYP 8 PLCS ADD GRIND TO ASSY DELETE L-WASHERS REV NOTE-SECT A-A ADD PIN 53 ADD 3/16 DIA THRU & CUT...ASSY SECT D-D	9/28/72	
E-7	J	REVISED [illegible] (2496)	8-10-84	[illegible]

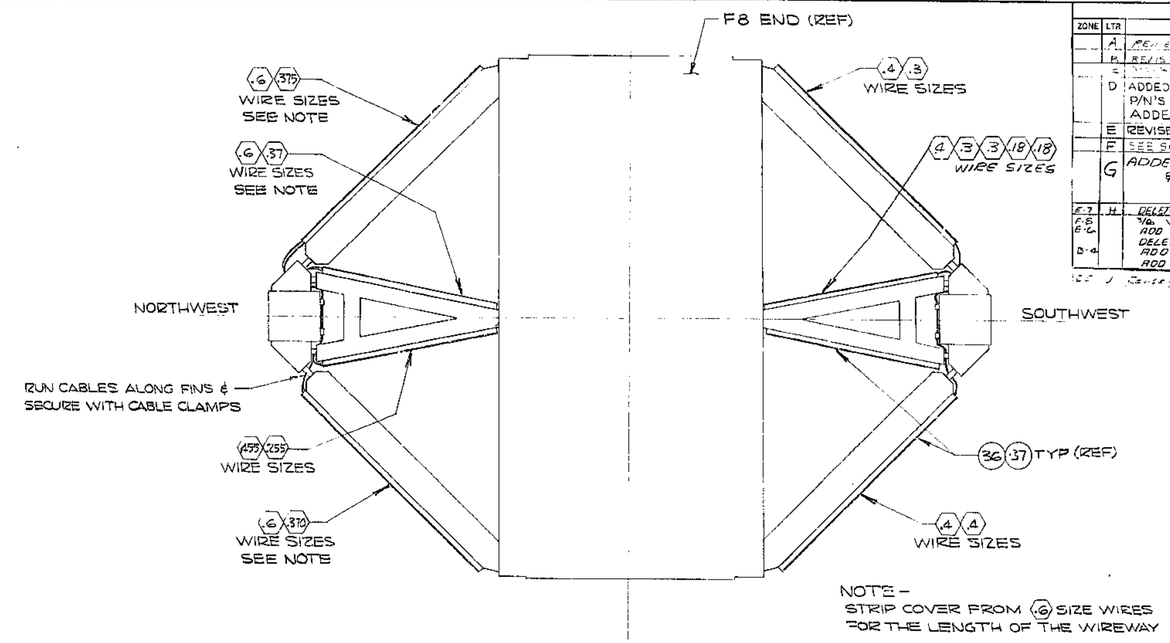

NOTE –
STRIP COVER FROM .6 SIZE WIRES FOR THE LENGTH OF THE WIREWAY

SECTION L-L SH. 1
SCALE 5/8"=1'

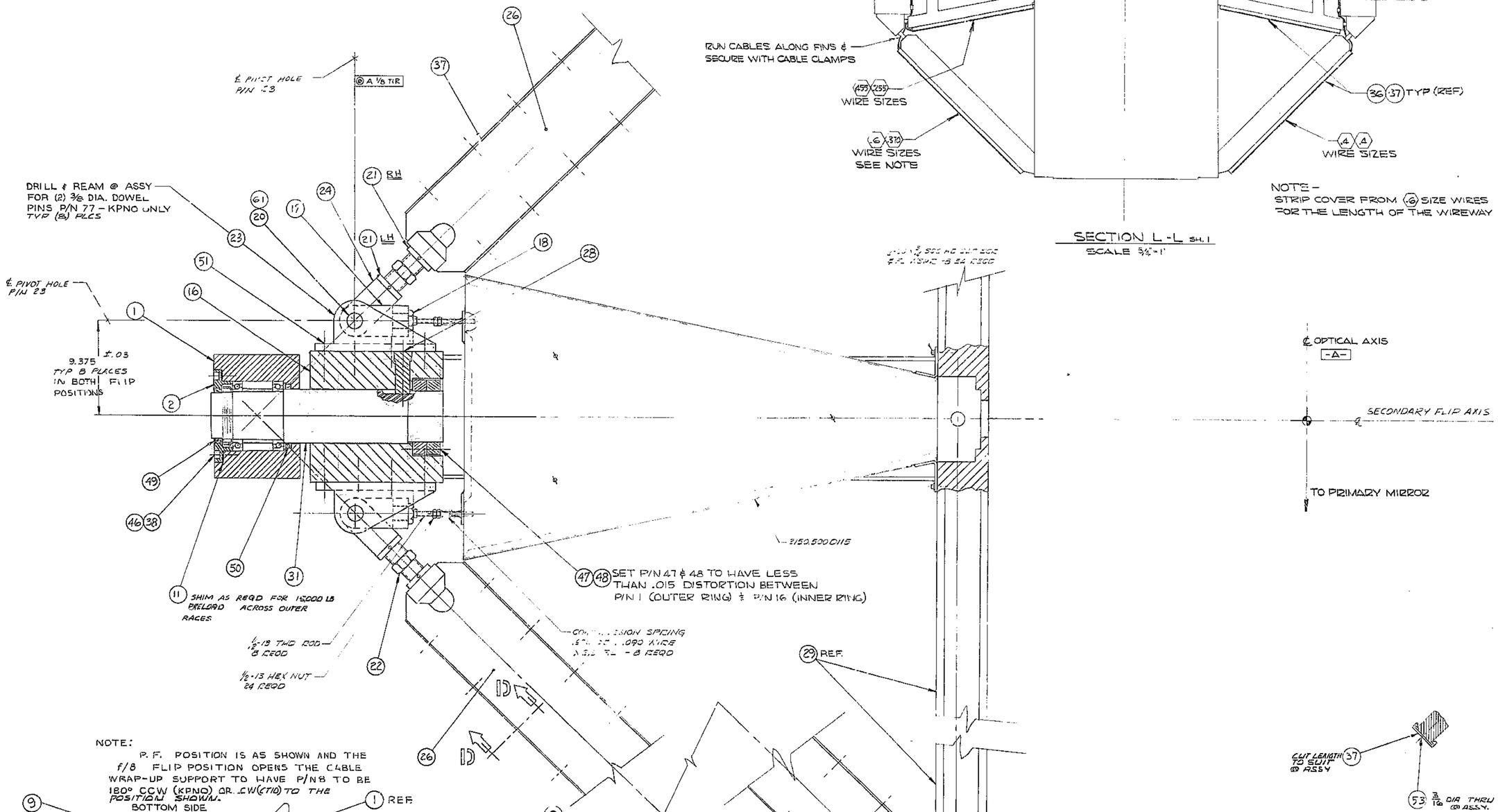

NOTE:
P. F. POSITION IS AS SHOWN AND THE f/8 FLIP POSITION OPENS THE CABLE WRAP-UP SUPPORT TO HAVE P/N 8 TO BE 180° CCW (KPNO) OR CW (CTIO) TO THE POSITION SHOWN.

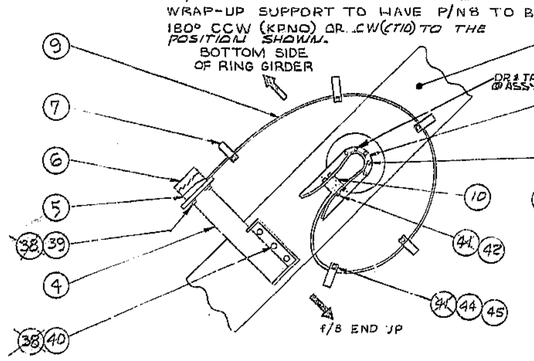

SECTION A-A KPNO ONLY
SCALE = 1/8

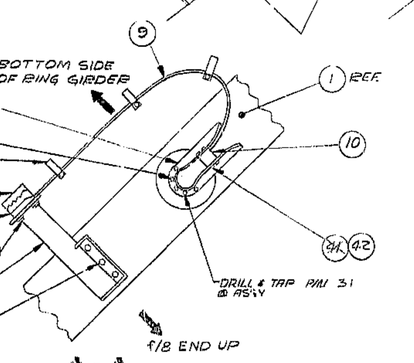

SECTION A-A CTIO ONLY
SCALE = 1/8

WRAP-UP CABLING FURNISHED BY AURA

SECTION B-B SH 1

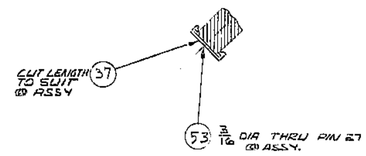

SECTION D-D
TYP OF SOUTH EAST & NORTH EAST OUTER FINS ONLY
SCALE 1/1

NEXT ASSY: 2150.202E002 (W.G. N103026)

FIND NO.	PART NO.	DESCRIPTION	QTY	MATERIAL	CODE IDENT
		LIST OF MATERIAL (LM)			

LIMITS ON MACHINED DIMENSIONS EXCEPT AS NOTED
ANGULAR = ± 1°0'
LINEAR:
X = ± .1 XXX = ± .010
XX = ± .03 FRACTIONAL = ± 1/32
BREAK ALL SHARP EDGES
MATERIAL

150" STELLAR TELESCOPE MTG

DRAWN J. GROVER (12-1-69)
CHECK
ENGR

W.G. N102966
APPROVED

western GEAR CORPORATION
HEAVY MACHINERY DIVISION
EVERETT, WASHINGTON

UPPER RING & SECONDARY ASSY

SIZE E | CODE IDENT NO. 16603 | 2150.500E002 | REV J

SCALE 1/4 | WT | LB | SHEET | OF 3

WESTERN GEAR CORPORATION
CONSTRUCTION PROJECTS DEPARTMENT
APPROVED FOR PROCUREMENT
DATE 1/2/70