NOTES: UNLESS OTHERWISE NOTED
1. REMOVE ALL BURRS AND SHARP EDGES
2. MACHINED SURFACE ROUGHNESS 125√
3. FASTEN ITEM 5 TO ITEM 3 USING ITEM 9, THEN FASTEN ASSY TO ITEM 2 USING ITEM 10, TYP 3 PLACES

REVISIONS						
ZONE	LTR	DESCRIPTION	ECR	DATE	BY	APVD

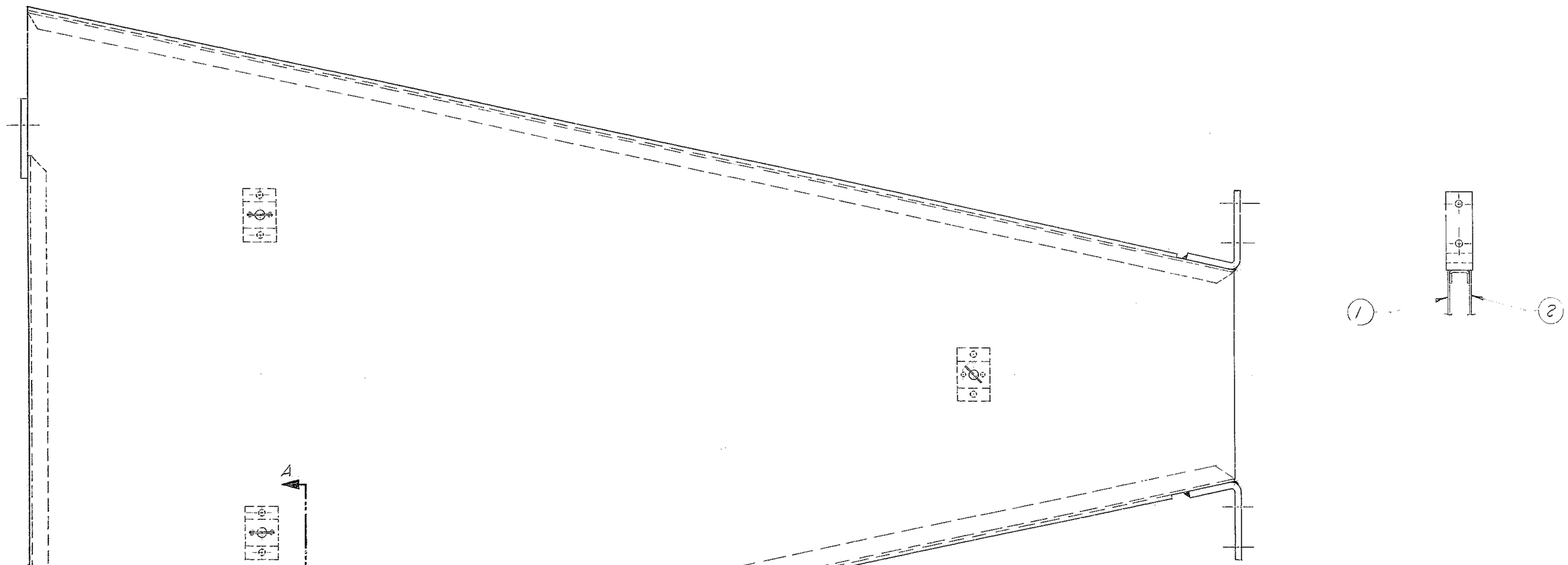

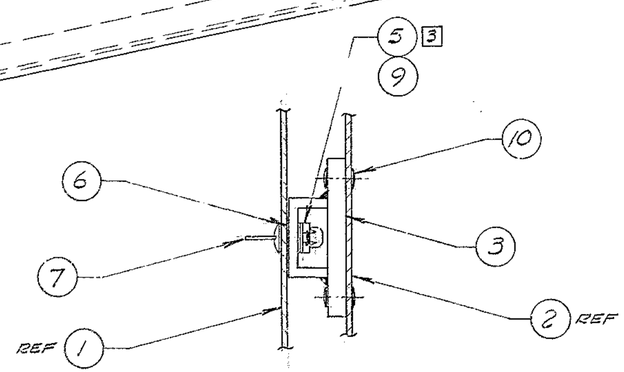

SECTION A-A
SCALE 1/1
TYP 3 PLACES

QTY REQD	PART OR IDENTIFYING NO.	DESCRIPTION	MATERIAL/SPECIFICATION	ZONE	ITEM NO.
6	5X520	POP RIVET-1/8 DIA			10
6	AAD 3-4	POP RIVET-3/32 DIA	WHITSON WESTERN		9
					8
3	82-12-180-16	1/4 TURN FSTNR-WING HD	SOUTHCO		7
3	82-32-101-20	RETAINER			6
3	82-35-302-15	RECEPTACLE	SOUTHCO		5
					4
3	2150.500B117	RECEPTACLE MOUNT			3
1	D114	BACK PANEL ASSY			2
1	2150.500D113	FRONT PANEL			1

PARTS LIST

TOLERANCES UNLESS OTHERWISE NOTED
DECIMALS .XX ± .03 .XXX ± .010
FRACTIONS ±—
ANGULAR ± 0° 30'

NEXT ASSEMBLY
2150.500E002
2120-E81

4M TELESCOPE

KITT PEAK NATIONAL OBSERVATORY
OPERATED BY THE ASSOCIATION OF UNIVERSITIES FOR RESEARCH IN ASTRONOMY, INC.
UNDER CONTRACT WITH NATIONAL SCIENCE FOUNDATION

NAME: CENTER FIN ASSEMBLY
REF FILE 1189

SCALE 1/2 & NOTED
PRINT ISSUED

DESIGNED BY	DATE	APPROVED BY	DATE	DWG NO.	REV
DRAWN BY	DATE 7-29-80	APPROVED BY	DATE 9-18-80	2150.500D115	
CHECKED BY	DATE	APPROVED BY	DATE	RELEASE DATE 9-19-80	

PEB 9-19-80