REVISIONS				
ZONE	LTR	DESCRIPTION	DATE	APPROVED
	A	REL FOR MANUFACTURE	1/23/70	GR
	B	CHGD. TITLE	[illegible]	
	C	6.25 DIA. WAS 6.015 DIA	7-15-71	JW
	D	-.002 ON 6.747 DIM WAS -.001	4-12-73	LBS

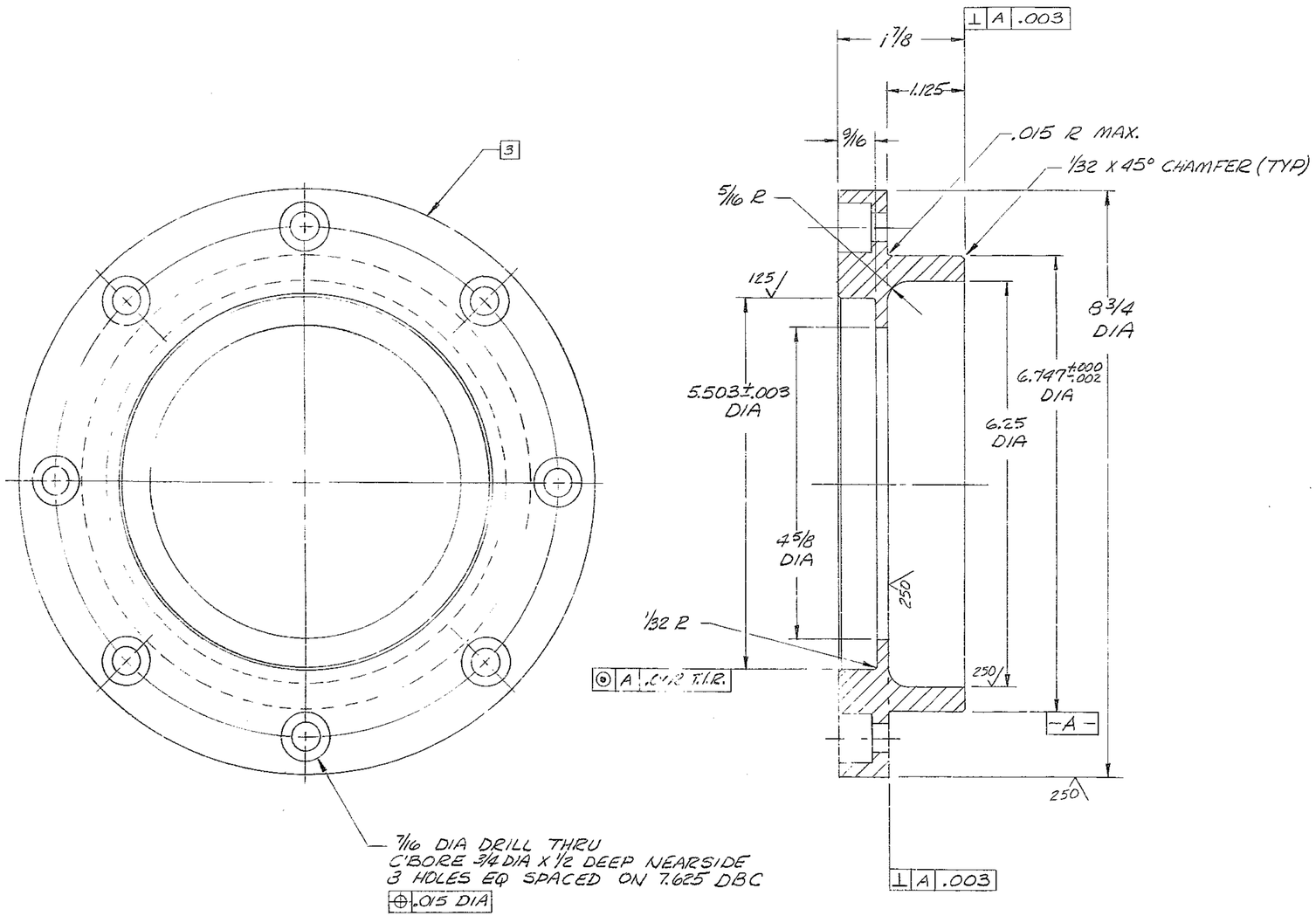

NOTES:
1. ALL DIMENSIONS ARE IN INCHES.
2. FINISH 125/ ALL OVER EXCEPT AS NOTED.
3. STAMP PART NO. 2150.500D004 APPROX AS SHOWN.

REF FILE 1187

NEXT ASSY: 2150.500E002 (W.G.N 102966)

FIND NO.	PART NO.	DESCRIPTION	QTY	MATERIAL	CODE IDENT

LIST OF MATERIAL (LM)

LIMITS ON MACHINED DIMENSIONS EXCEPT AS NOTED
ANGULAR = ± 1° 0'
LINEAR:
.X = ± .1 .XXX = ± .010
.XX = ± .03 FRACTIONAL = ± 1/32

BREAK ALL SHARP EDGES

MATERIAL
R 9 DIA x 2
STL ASTM A36

150 IN. STELLAR TELESCOPE MTG

DRAWN [illegible] 8-27-68
CHECK [illegible] 8-27-68
ENGR

W.G.E 107683
APPROVED

Western GEAR CORPORATION
HEAVY MACHINERY DIVISION
EVERETT, WASHINGTON

RETAINER, BEARING
UPPER RING & SECONDARY ASSEMBLY

SIZE	CODE IDENT NO.		REV
D	16603	2150.500D004	D

SCALE 1/1 WT LB SHEET 1 OF 1

WESTERN GEAR CORPORATION
CONSTRUCTION PROJECTS DEPARTMENT
APPROVED FOR PROCUREMENT
Gene Russo DATE 1/23/70

P1337