THIS DOCUMENT CONTAINS INFORMATION PROPRIETARY TO WESTERN GEAR CORPORATION. ALL DESIGN, MANUFACTURING, REPRODUCTION, USE, PATENT AND SALES RIGHTS REGARDING THE SAME ARE HEREBY EXPRESSLY RESERVED BY WESTERN GEAR CORPORATION. THIS DOCUMENT IS SUMBITTED FOR REFERENCE PURPOSES ONLY AND SHALL NOT BE DISCLOSED TO ANY UNAUTHORIZED PERSON OR INCORPORATED INTO ANY OTHER PROJECT.

REVISIONS

ZONE	LTR	DESCRIPTION	DATE	APPROVED
	A	REVISED PER AURA APPD PRINT OF 1/15/70	1/22/70	
	B	REV PER AURA PRINT 2/25/70		
	B	DIM. & CHAMF. CHG. TITLE CHG.	4/1/70	GR
B-2	C	ADDED "3/8 R TYP (2) PLCS"	2-2-71	JW
	D	ADDED AS BUILT SLOTTED HOLE DETAIL & CHAMFERS	7/27/71	JW

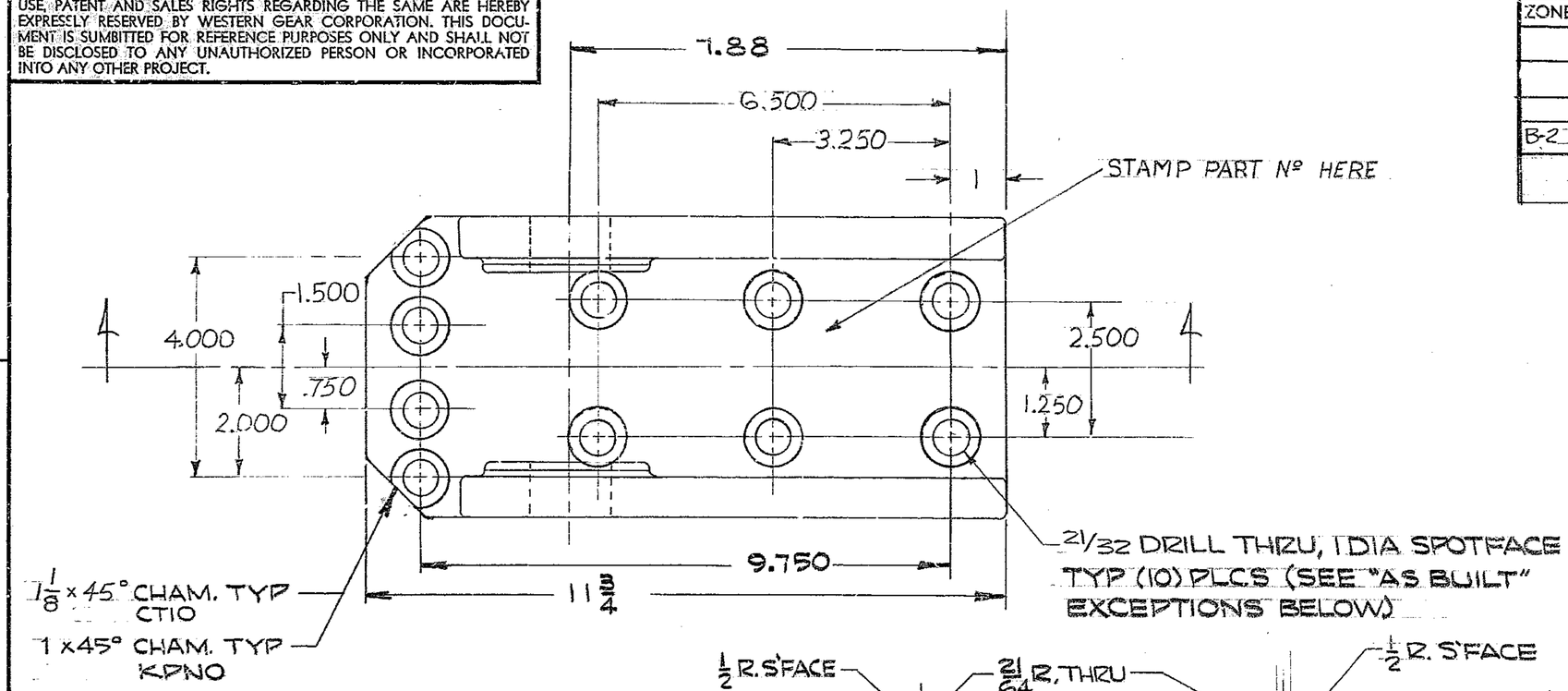

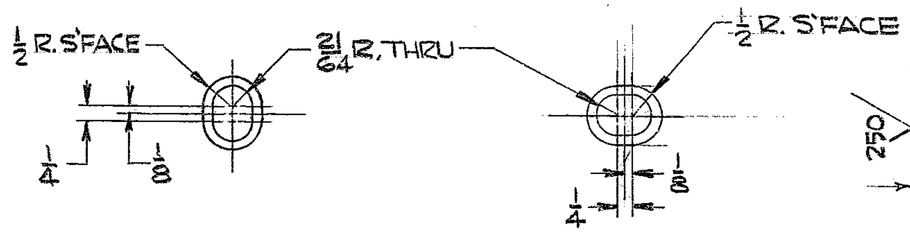

SLOTTED HOLE TYP (10) PLCS. (4) BRKTS INSTALLED ALONG LOCK AXIS

SLOTTED HOLE TYP (10) PLCS (4) BRKTS INSTALLED ALONG FLIP AXIS

AS BUILT KPNO

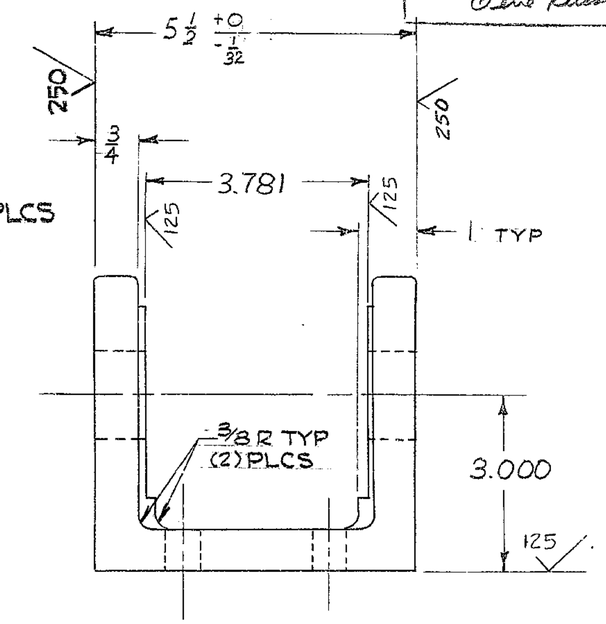

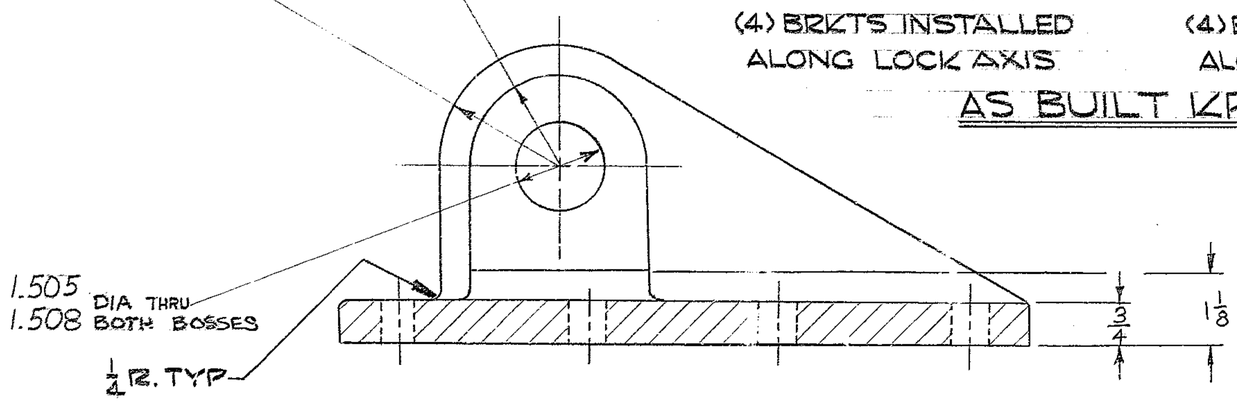

WESTERN GEAR CORPORATION
CONSTRUCTION PROJECTS DEPARTMENT
APPROVED FOR PROCUREMENT
Gene Russo DATE 1/23/70

D-107,678

NOTE:
1. CASTING TOLERANCE 1/16
2. FILLET AND CORNER RADII 1/8
3. ALLOW MATERIAL AT ALL SURFACES MARKED ✓
4. ALL DIMENSIONS IN INCHES
5. APPLY (1) COAT OF PRIMER PER WGC SPEC Nº 511

NEXT ASSY 2150.500 E002 (WG N-102,966)

1189

FIND NO.	PART NO.	DESCRIPTION	QTY	MATERIAL	CODE IDENT

LIST OF MATERIAL (LM)

LIMITS ON MACHINED DIMENSIONS EXCEPT AS NOTED
ANGULAR = ± 1° 0'
LINEAR:
.X = ± .1 .XXX = ± .010
.XX = ± .03 FRACTIONAL = ± 1/32
BREAK ALL SHARP EDGES

MATERIAL
ASTM A27
GRADE 60-30
STEEL CASTING

150" STELLAR TELESCOPE MTG.

DRAWN WAIDNER 12-9-69
CHECK
ENGR

W.G. D107678

APPROVED

Western GEAR CORPORATION
HEAVY MACHINERY DIVISION
EVERETT, WASHINGTON

FIN BRACKET -
UPPER RING & SECONDARY ASSEMBLY

SIZE	CODE IDENT NO.		REV
C	16603	2150.500C027	D

SCALE 1/2 WT LB SHEET 1 OF 1

P1356