REVISIONS				
ZONE	LTR	DESCRIPTION	DATE	APPROVED
	A	REL FOR MANUFACTURE	1/23/70	GR
	B	TITLE CHG	4-1-70	
	C	MAT'L WAS 3 1/2 LG	4/12/73	LDS

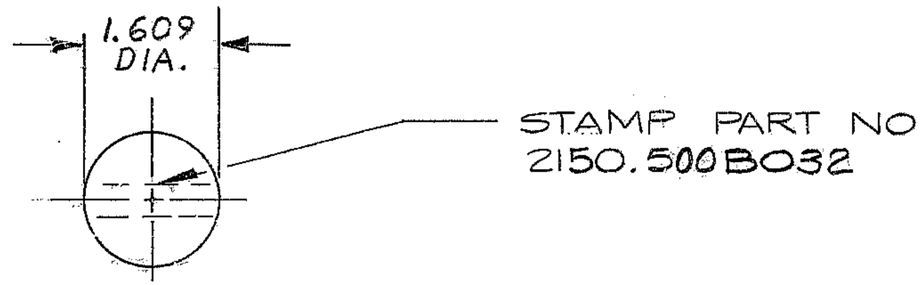

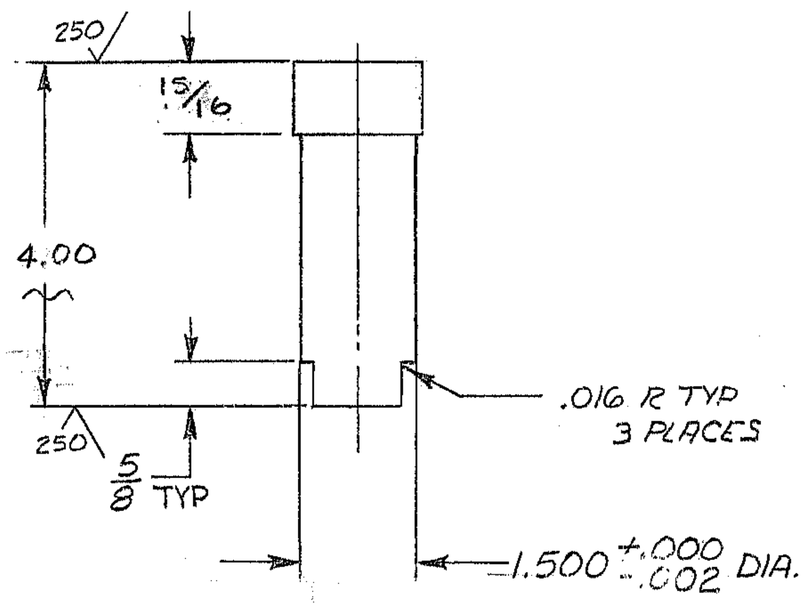

NOTES:
1. ALL DIMENSIONS ARE IN INCHES
2. MATERIAL: STL AISI C1018 CR.
3. ROD 1 3/4 DIA X 4
4. 125 FINISH ALL OVER EXCEPT AS NOTED
5. CENTERS PERMISSIBLE

WESTERN GEAR CORPORATION
CONSTRUCTION PROJECTS
DEPARTMENT
APPROVED FOR
PROCUREMENT
Gene Russo DATE 1/23/70

REF. FILE 1189

NEXT ASSY: 2150.500E002 (W.G.N. 102,966)

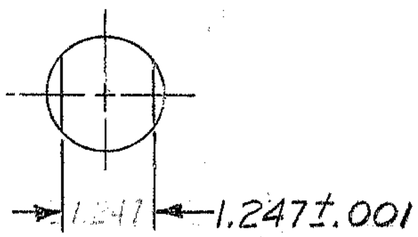

LIMITS ON MACHINED DIMENSIONS EXCEPT AS NOTED ANGULAR ± 1° 0' LINEAR .X = ± .1 .XX = ± .03 .XXX = ± .010 FRACTIONAL ± 1/32 BREAK ALL SHARP EDGES	150 IN. STELLAR TELESCOPE DRAWN K. Williams 3/9/68 CHECK J.W.N. 3/9/68 ENGR W.G.C 112412 APPROVED	Western GEAR CORPORATION HEAVY MACHINERY DIVISION EVERETT, WASHINGTON BEARING SHAFT KEY - UPPER RING & SECONDARY ASSY	
		SIZE B / CODE IDENT NO. 16603 / 2150500B032	REV C
		SCALE 1/2 / WT. LB / SHEET 1 OF 1	

P1335