THIS DOCUMENT CONTAINS INFORMATION PROPRIETARY TO WESTERN GEAR CORPORATION. ALL DESIGN, MANUFACTURING, REPRODUCTION, USE, PATENT, AND SALES RIGHTS REGARDING THE SAME ARE HEREBY EXPRESSLY RESERVED BY WESTERN GEAR CORPORATION. THIS DOCUMENT IS SUBMITTED FOR REFERENCE PURPOSES ONLY AND SHALL NOT BE DISCLOSED TO ANY UNAUTHORIZED PERSON OR INCORPORATED INTO ANY OTHER PROJECT.

REVISIONS

ZONE	LTR	DESCRIPTION	DATE	APPROVED
	A	REL FOR MANUFACTURE	1/23/70	G.R.
	B	REV PER AURA	3/6/70	J.G.
	B	ADD. DWG Nº NOTE. (DESIGNATED L.H & R.H)	4/1/70	G.R.

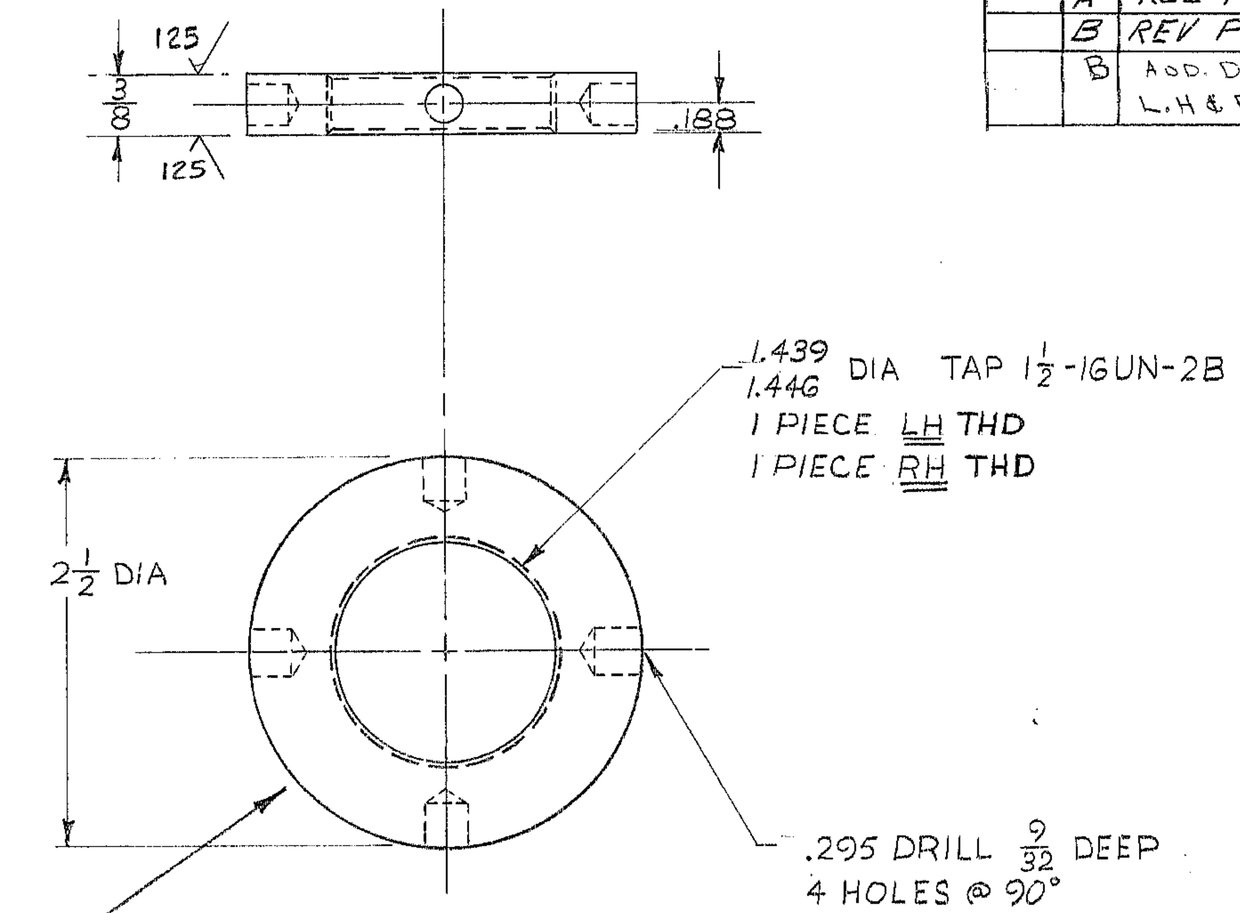

NOTES
1. ALL DIMENSIONS IN INCHES
2. MATL STEEL BAR 2 1/2 DIA X 3/8 AISI C1020 OR EQ.

STAMP PART Nº HERE
"2150.500B023-RH" OR "2150.500B023-LH"

REF. FILE 1189

WESTERN GEAR CORPORATION
CONSTRUCTION PROJECTS DEPARTMENT
APPROVED FOR PROCUREMENT
Gene Russo DATE 1/23/70

NEXT ASSY 2150.500E002 (WG N-102,966)

LIMITS ON MACHINED DIMENSIONS EXCEPT AS NOTED
ANGULAR ± 1° 0'
LINEAR
.X = ± .1
.XX = ± .03
.XXX = ± .010
FRACTIONAL ± 1/32

BREAK ALL SHARP EDGES

150" STELLAR TELESCOPE

DRAWN WAIDNER 12-11-69
CHECK
ENGR
WGC112755
APPROVED

WESTERN GEAR CORPORATION
HEAVY MACHINERY DIVISION
EVERETT, WASHINGTON

SPANNER NUT, CENTER FIN
UPPER RING & SECONDARY ASSY

SIZE	CODE IDENT NO.		REV
B	16603	2150.500B023	B

SCALE 1/1 WT. LB SHEET 1 OF 1

P1335