THIS DOCUMENT CONTAINS INFORMATION PROPRIETARY TO WESTERN GEAR CORPORATION. ALL DESIGN, MANUFACTURING, REPRODUCTION, USE, PATENT, AND SALES RIGHTS REGARDING THE SAME ARE HEREBY EXPRESSLY RESERVED BY WESTERN GEAR CORPORATION. THIS DOCUMENT IS SUBMITTED FOR REFERENCE PURPOSES ONLY AND SHALL NOT BE DISCLOSED TO ANY UNAUTHORIZED PERSON OR INCORPORATED INTO ANY OTHER PROJECT.

WESTERN GEAR CORPORATION
CONSTRUCTION PROJECTS DEPARTMENT
APPROVED FOR PROCUREMENT
Gene Russo DATE 1/23/70

REVISIONS

ZONE	LTR	DESCRIPTION	DATE	APPROVED
	A	REL FOR MANUFACTURE	1/23/70	G.R.
	B	REV PER AURA	3/6/70	J. G.
	C	TITLE CHGD R.H.& LH. DESIGNATED	4-1-70	
2405	D	AS BUILT-FOR WAS COND. SEE C CHANGE	7-24-80	J.G.

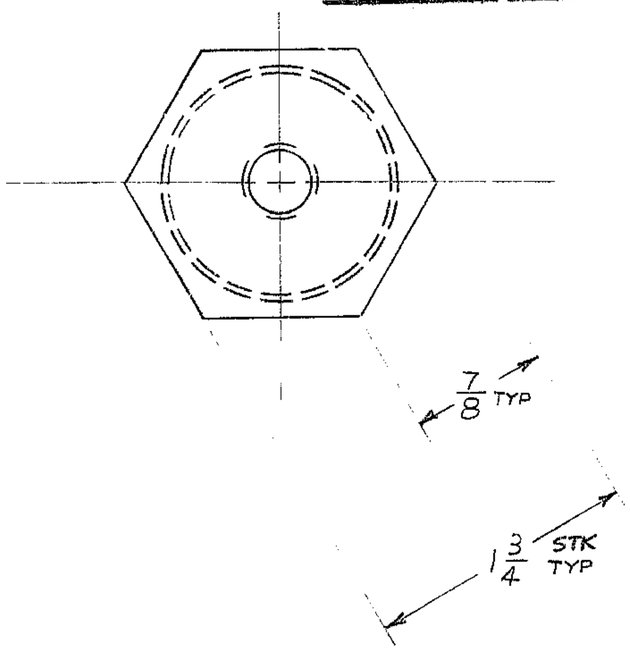

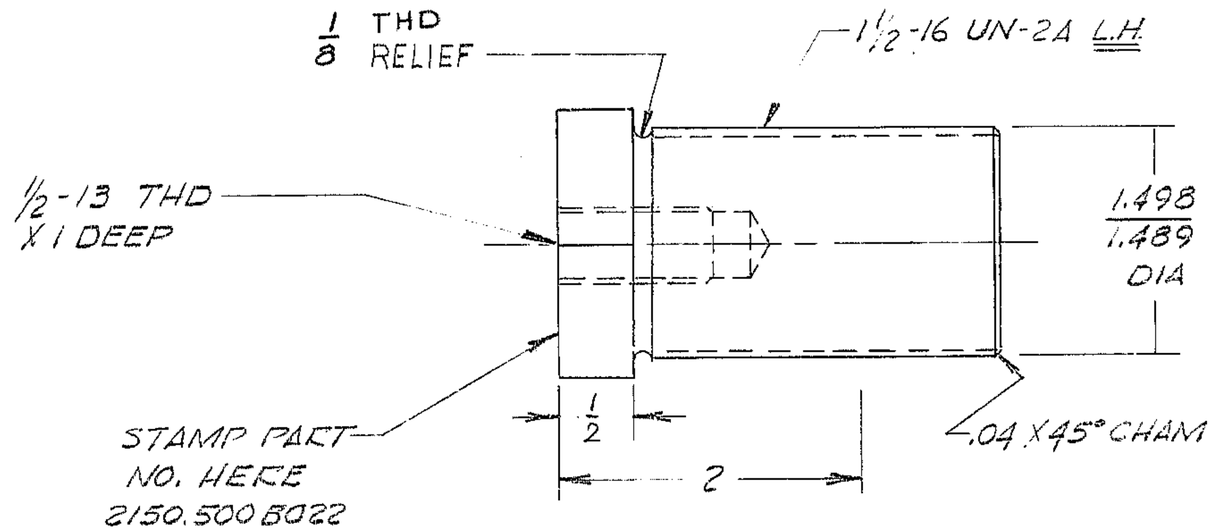

NOTES

1. ALL DIMENSIONS IN INCHES
2. MATL: STL HEX AISI 4140 H.T. TO 300-325 BHN
3. CENTERS PERMISSABLE

REF. FILE 1189

NEXT ASSY 2150.500E002 (WG N-102,966)

LIMITS ON MACHINED DIMENSIONS EXCEPT AS NOTED ANGULAR ± 1° 0' LINEAR .X = ± .1 .XX = ± .03 .XXX = ± .010 FRACTIONAL ± 1/32 BREAK ALL SHARP EDGES	150" STELLAR TELESCOPE MTG DRAWN WAIDNER 12-9-69 CHECK ENGR W.G.C112754 APPROVED	western GEAR CORPORATION — HEAVY MACHINERY DIVISION EVERETT, WASHINGTON CENTER FIN ADJ. SCREW UPPER RING & SECONDARY ASSY SIZE B — CODE IDENT NO. 16603 — 2150.500 B022 — REV 0 SCALE FULL — WT. LB — SHEET 1 OF 1

P1335