THIS DOCUMENT CONTAINS INFORMATION PROPRIETARY TO WESTERN GEAR CORPORATION. ALL DESIGN, MANUFACTURING, REPRODUCTION, USE, PATENT, AND SALES RIGHTS REGARDING THE SAME ARE HEREBY EXPRESSLY RESERVED BY WESTERN GEAR CORPORATION. THIS DOCUMENT IS SUBMITTED FOR REFERENCE PURPOSES ONLY AND SHALL NOT BE DISCLOSED TO ANY UNAUTHORIZED PERSON OR INCORPORATED INTO ANY OTHER PROJECT.

REVISIONS

ZONE	LTR	DESCRIPTION	DATE	APPROVED
	A	REL FOR MANUFACTURE	1/22/70	
	B	REV PER AURA 2-25-70	4/1/70	GR
	B	REV. NOTES & FINISHES		

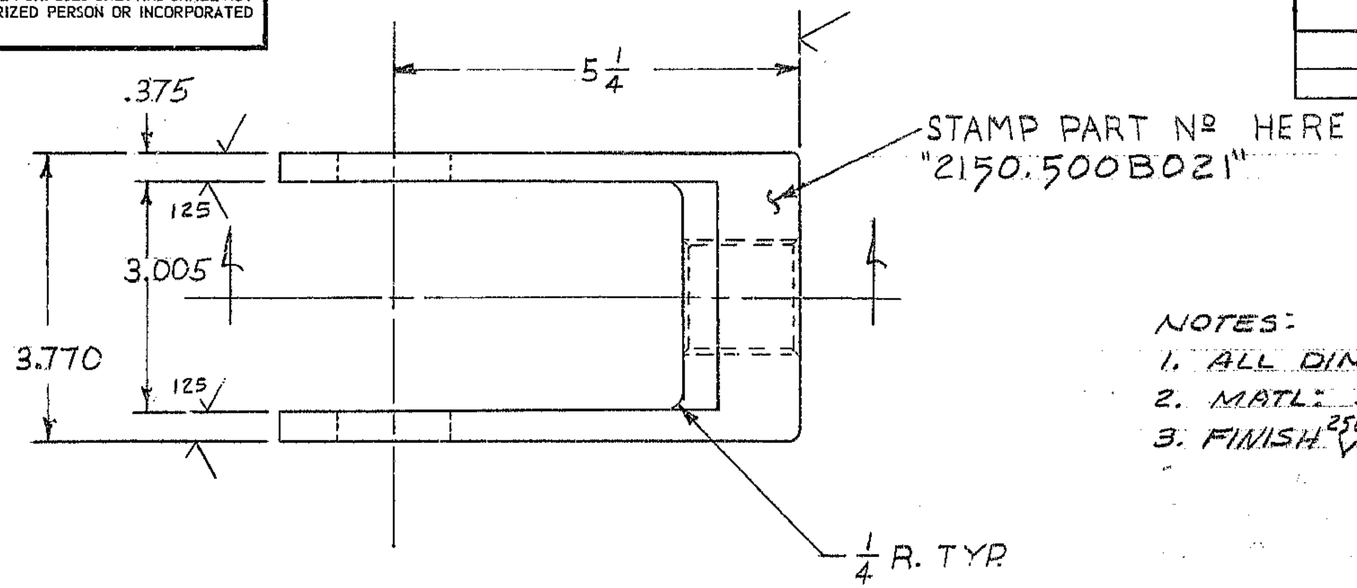

NOTES:
1. ALL DIMENSIONS IN INCHES
2. MATL: STL AISI 4130 BAR
3. FINISH 250√ ALL OVER EXCEPT AS NOTED.

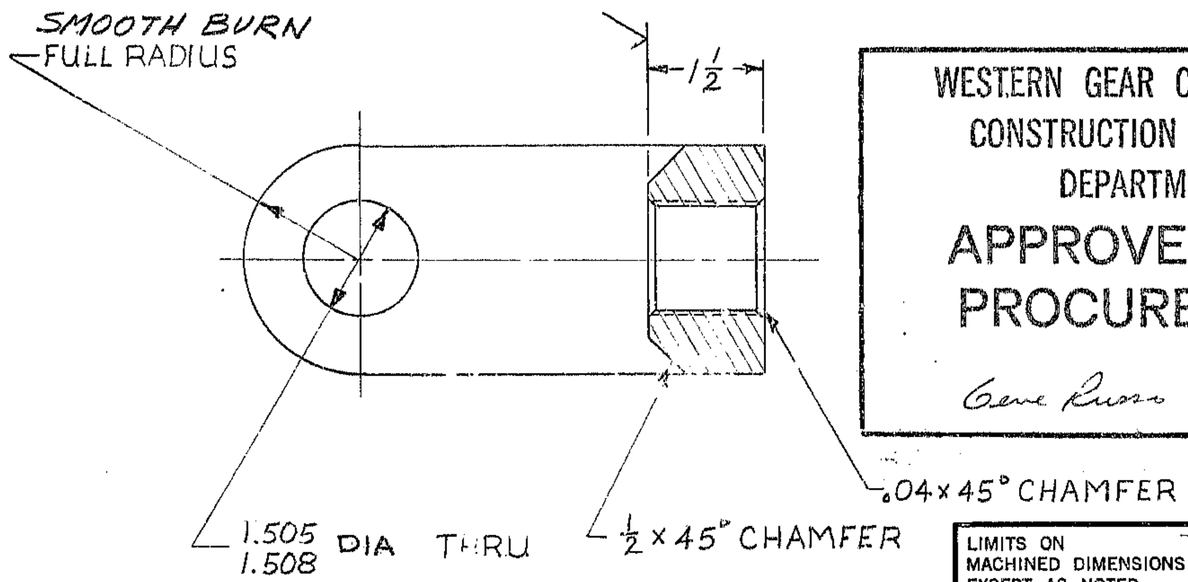

WESTERN GEAR CORPORATION
CONSTRUCTION PROJECTS
DEPARTMENT
APPROVED FOR
PROCUREMENT
Gene Russo DATE 1/23/70

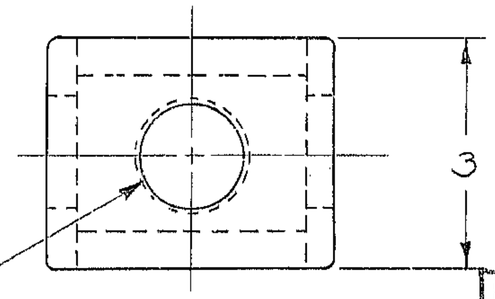

REF. FILE 1189

1.439
1.446 DIA. TAP $1\frac{1}{2}$-16 UN-2C-LH

NEXT ASSY. 2150.500E002 (WG N-102,966)

LIMITS ON MACHINED DIMENSIONS EXCEPT AS NOTED
ANGULAR ± 1° 0'
LINEAR
.X = ± .1
.XX = ± .03
.XXX = ± .010
FRACTIONAL ± 1/32

BREAK ALL SHARP EDGES

150" STELLAR TELESCOPE MTG

DRAWN WAIDNER 12-8-69
CHECK
ENGR
WGC112753
APPROVED

Western GEAR CORPORATION
HEAVY MACHINERY DIVISION
EVERETT, WASHINGTON

CENTER FIN CLEVIS EYE
UPPER RING & SECONDARY ASSY

SIZE	CODE IDENT NO.		REV
B	16603	2150.500B021	B

SCALE 1/2 WT. LB SHEET 1 OF 1

P1335