REVISIONS				
ZONE	LTR	DESCRIPTION	DATE	APPROVED
	A	REVISED PER AURA APPD PRINT	11-13-68	
C2	A	NOTE 3 ADDED		
H2	A	NOTE REVISED TO MACH ITEM 14 FOR .015 MAX END FLOAT		
3C	B	CHANGED ANGLE ON CAM	12-2-68	PTG
E-1	C	DELETED 7½° ANGLE, SCALE WAS ½	1/12/69	PTG
	D	DELETED COUDE #5, ADDED REPLACEMENT CWGT ASSY, WG. DWG. NO. WAS N102300Z, FOR NEXT ASSY.	8/8/71	JM
A8	E	ADDED DOWELS & SHIM NOTE TO VIEW E-E	7/15/71	JW

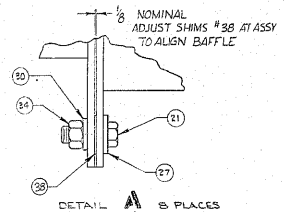

DETAIL A SCALE: 1/1 8 PLACES

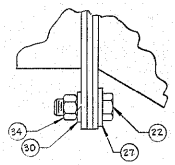

DETAIL B SCALE: 1/1 8 PLACES

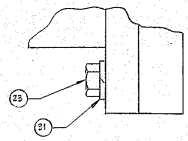

DETAIL C SCALE: 1/1 40 PLACES

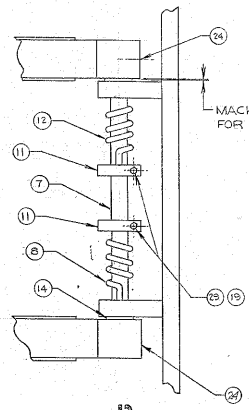

DETAIL D SCALE: 1/2

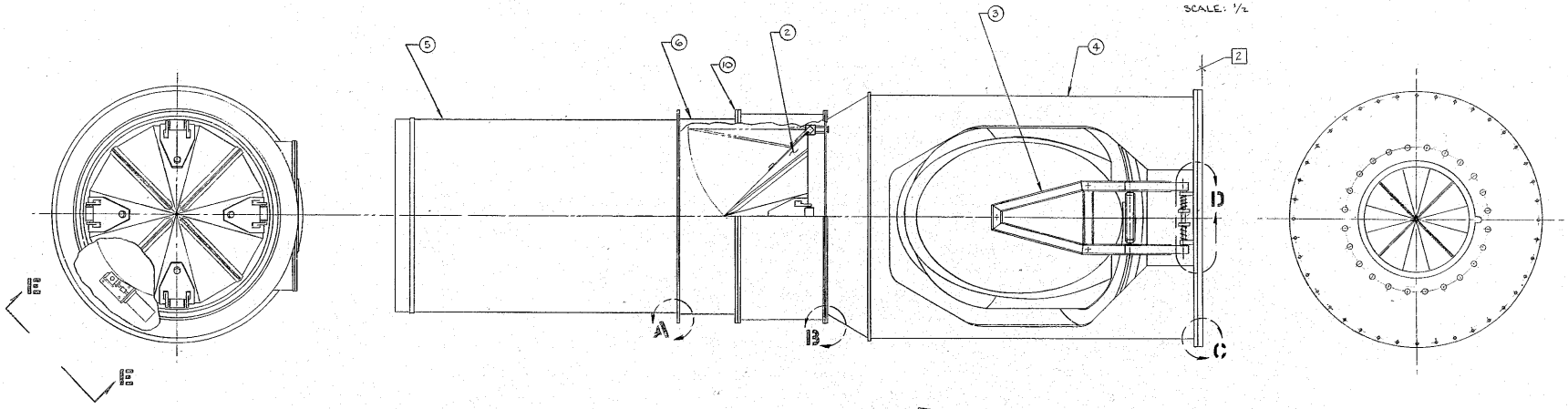

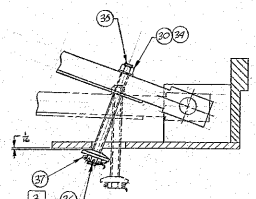

DETAIL F SCALE: 1/2

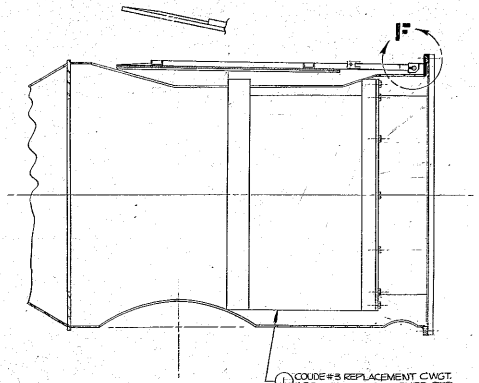

1 COUDE #3 REPLACEMENT CWGT. ASSY - AURA FURNISHED PER AURA DWG. 2150.283-E702

NOTES

1. BOND ITEM 10 TO 6 WITH SUITABLE ADHESIVE
2. APPLY SECOND COAT OF PRIME PAINT TO ALL SURFACES NOT YET FINISH PAINTED OR FLAT BLACK CHEMICALLY FINISHED ⅞ THO FINISH COATS OF 3M #3 BLACK VELVET PER MGC SPEC 120, 211 EXCEPT SURFACES MARKED 2
3. DRILL STUD AT ASSY AFTER ADJUSTMENT 3/32 DIA FOR .078 DIA COTTER PIN

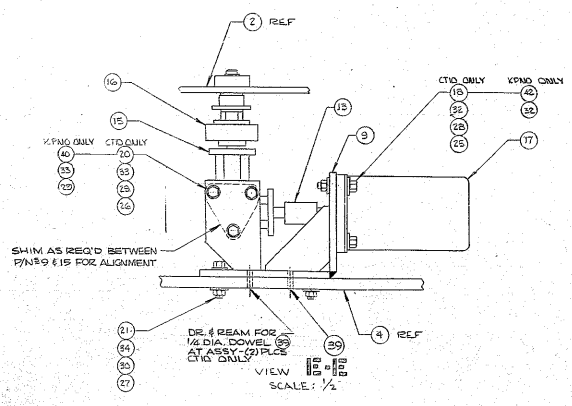

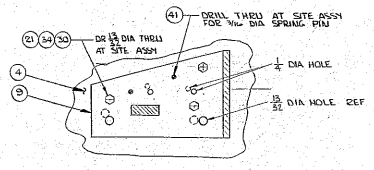

WESTERN GEAR CORPORATION
CONSTRUCTION PROJECTS DEPARTMENT
APPROVED FOR PROCUREMENT
DATE 11/21/68

NEXT ASSY 2150.280E002 (WGN102844)

REF. REF. 1176

FIND NO.	PART NO.	DESCRIPTION	QTY	MATERIAL	CODE IDENT

LIST OF MATERIAL (LM)

LIMITS ON MACHINED DIMENSIONS EXCEPT AS NOTED
ANGULAR = = 1°0'
LINEAR:
X = = .1 XXX = = .010
XX = = .03 FRACTIONAL = = 1/32
BREAK ALL SHARP EDGES
MATERIAL

150 TON STELLAR TELESCOPE MOUNTING

DRAWN FLAVIN 4-4-68
CHECK 4-8-68
ENGR

Western GEAR CORPORATION
HEAVY MACHINERY DIVISION
EVERETT, WASHINGTON

COUDE #3 AND CENTRAL BAFFLE ASSY

WGN102989
APPROVED
ORIGINAL

SIZE E CODE IDENT NO. 16603 2150.283E002 REV E

SCALE 1/8 WT LB SHEET 1 OF