REVISIONS				
ZONE	LTR	DESCRIPTION	DATE	APPROVED
D1	A	DETAIL B ADDED	11-17-68	
	A	REVISED PER AURA APPR PRINT	11-27-68	
2 E	B	CHANGE HOLE PATTERN & ANGLE ON CAM	11-22-68	PO.

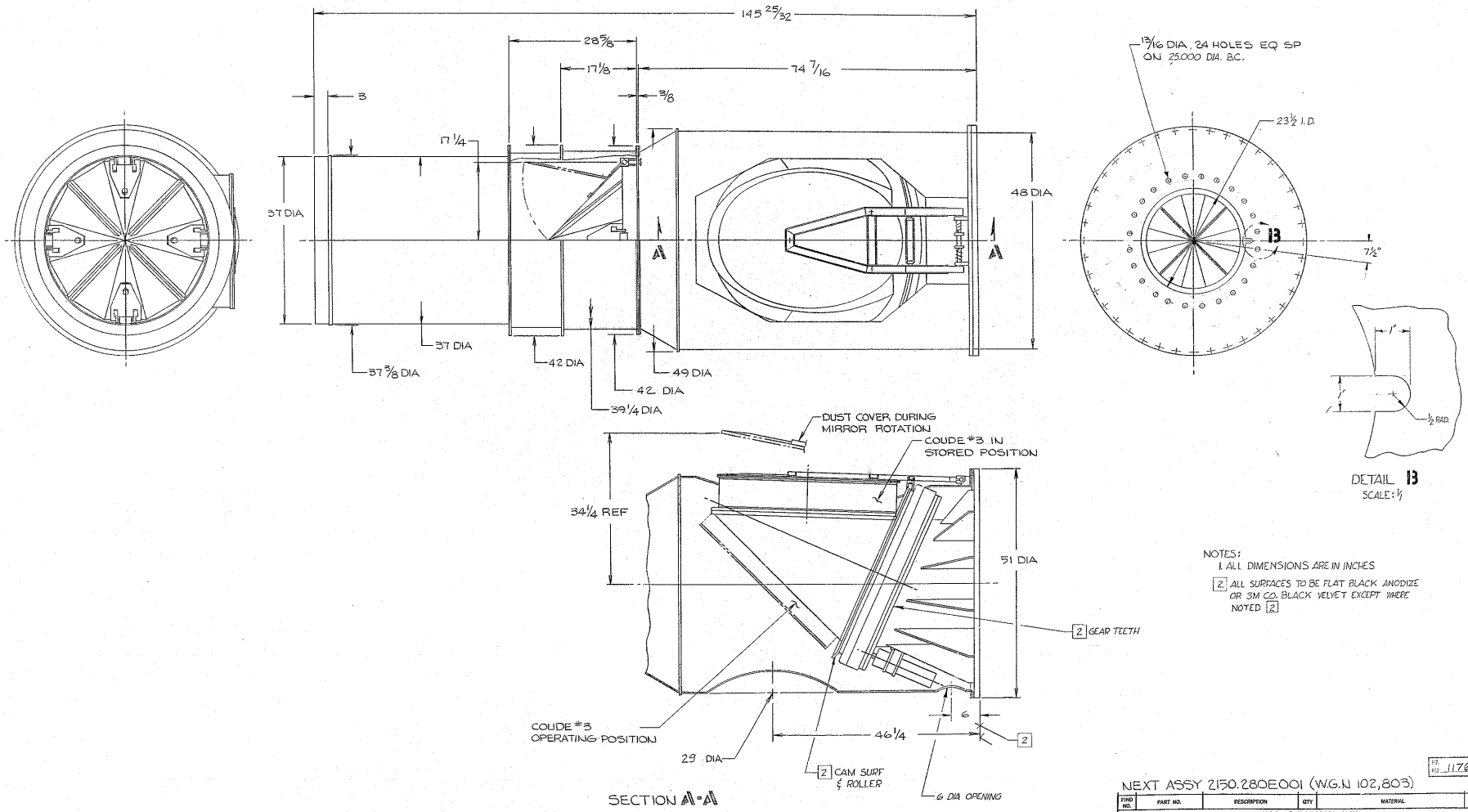

NOTES:
1. ALL DIMENSIONS ARE IN INCHES
2. ALL SURFACES TO BE FLAT BLACK ANODIZE OR 3M CO. BLACK VELVET EXCEPT WHERE NOTED 2

WESTERN GEAR CORPORATION
CONSTRUCTION PROJECTS DEPARTMENT
APPROVED FOR PROCUREMENT
PG DATE 11/14/68

FABRICATION TOLERANCES EXCEPT AS NOTED
a. UP TO 10 INCHES ± 1/16
b. 10 TO 50 INCHES ± 1/8
c. 50 INCHES & OVER ± 1/4

NEXT ASSY 2150.280E001 (W.G.N 102,803)

H.T. REF 11.76

FIND NO.	PART NO.	DESCRIPTION	QTY	MATERIAL	CODE IDENT

LIST OF MATERIAL (LM)

LIMITS ON MACHINED DIMENSIONS EXCEPT AS NOTED
ANGULAR = ± 1° 0'
LINEAR:
X = ± .1 XXX = ± .010
XX = ± .03 FRACTIONAL = ± 1/32
BREAK ALL SHARP EDGES
MATERIAL

150 IN STELLAR TELESCOPE MTG

DRAWN B. KEB/J. CAHL 3/23/68
CHECK 5/13/68
ENGR

W.G.N 102,806
APPROVED

Western GEAR CORPORATION — HEAVY MACHINERY DIVISION, EVERETT, WASHINGTON

OUTLINE, CENTRAL, COUDE #3 AND BAFFLE ASSY

SIZE	CODE IDENT NO.		REV
E	16603	2150.283 E001	B

SCALE 1/8 | WT 350 LB | SHEET 1 OF 1