REVISIONS				
ZONE	LTR	DESCRIPTION	DATE	APPROVED
C8	A	37 3/8 DIM WAS 37.375	11-5-68	
A8	A	5/16 FILLET SKIP WELD WAS 3/16 FILLET	"	
C2	A	P/N 2: ROLLED & WELDED ADDED	"	
D3	A	DIA THRU 16 PLACES WAS DIA THRU 8 PLACES	"	
	A	REVISED PER ALDA ADD PRINT	"	
	B	DELETED NOTE 4 - ADDED NOTE 7	2-6-73	LDS

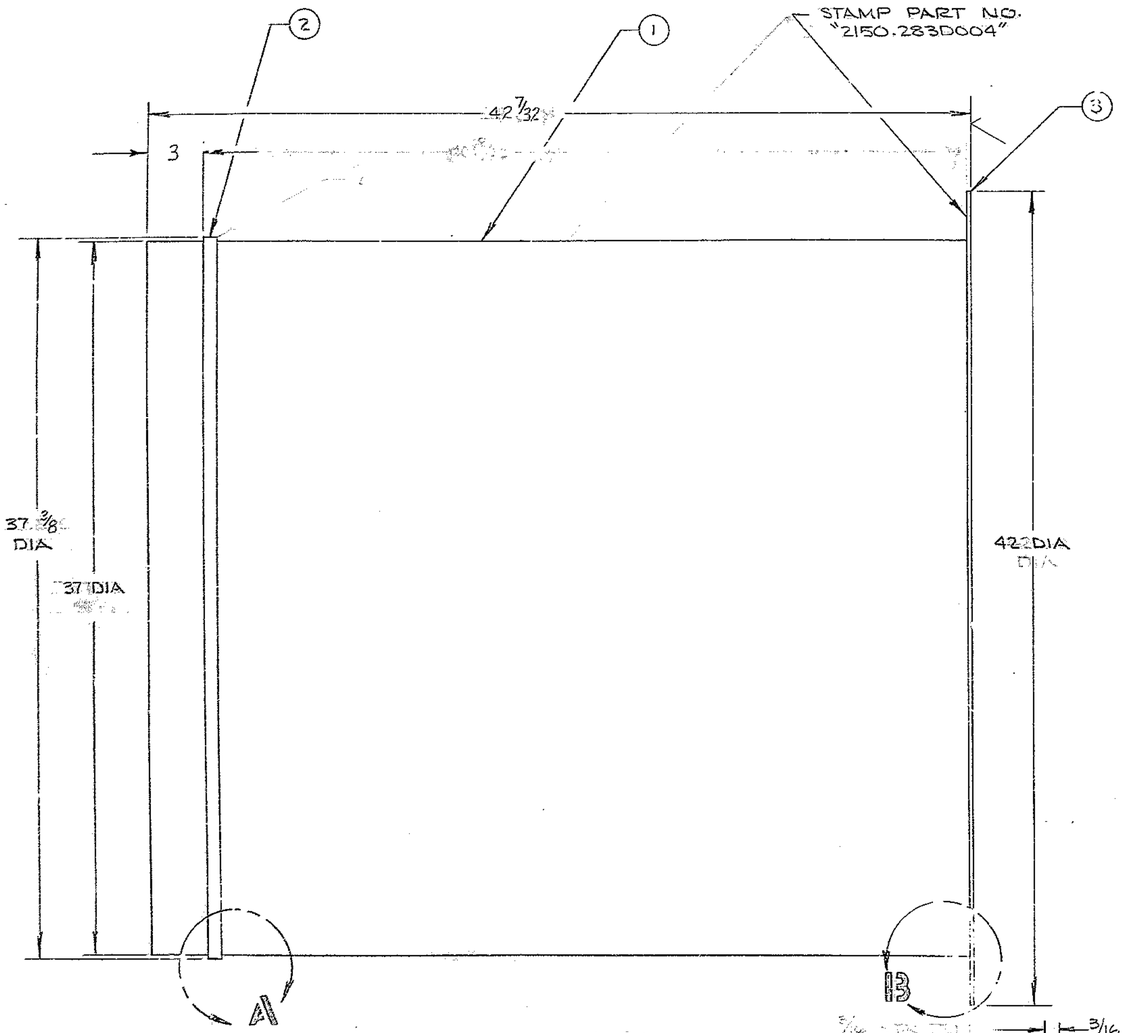

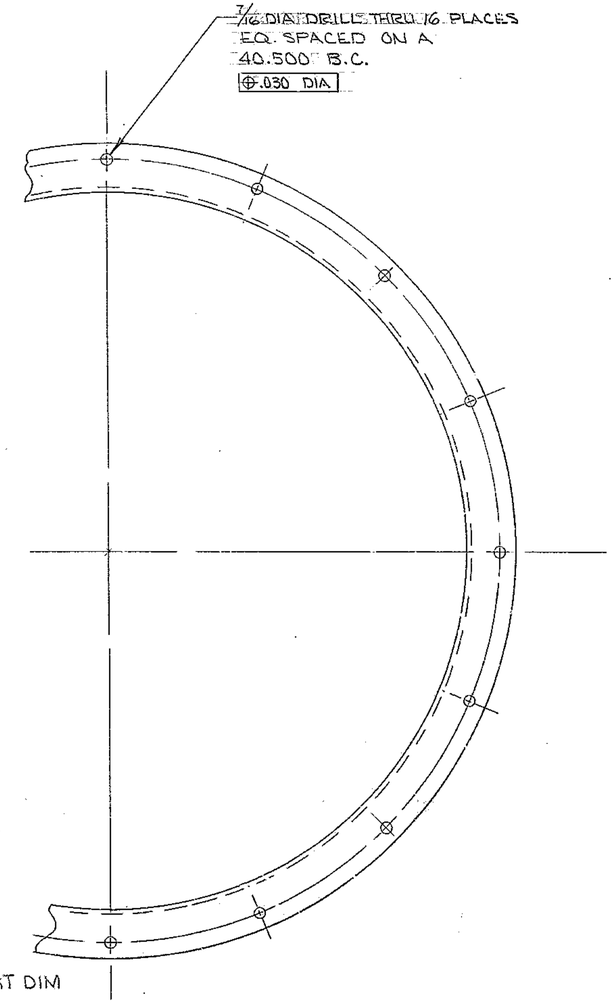

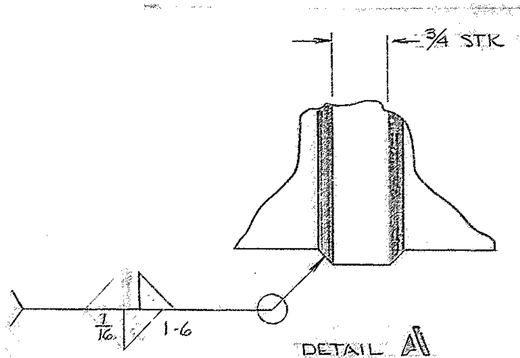

DETAIL A1
SCALE: 1/1

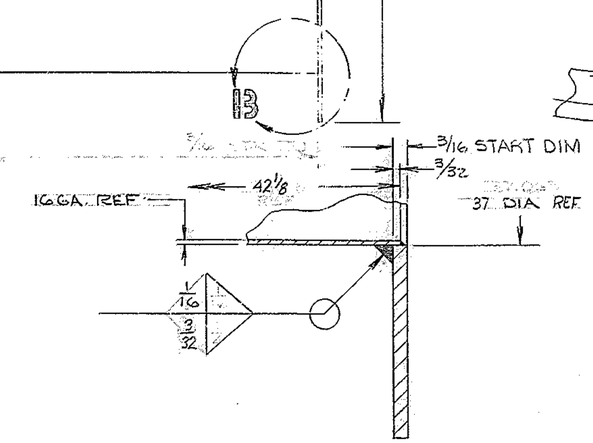

DETAIL B3
SCALE: 1/1

MATERIAL LIST				
PC NO.	QTY	DESCRIPTION	MATL & SPEC.	ROUGH WT
1	1	37 O.D. x 16 GA. x 42 1/8 PIPE ROLLED & WELDED	STL CRS C-1018	
2	1	37 3/8 O.D. x 37 1/16 x 3/4 ROLLED & WELDED	STL ASTM A-36	
3	1	PL 42 O.D. x 37 1/16 I.D. x 1/4	STL ASTM A-36	

NOTES:
1. ALL DIMENSIONS ARE IN INCHES
2. FABRICATION TOLERANCES EXCEPT AS NOTED
   a. UP TO 10 INCHES 1/16
   b. 10 TO 50 INCHES 1/8
   c. 50 INCHES & OVER 1/4
3. WELD PER W.G.C. SPECIFICATION 752 APP TI
4. ~~STRESS RELIEVE AFTER WELDING & BEFORE MACHINING PER W.G.C. SPECIFICATION 510.~~
5. APPLY ONE COAT OF PRIME PAINT ALL OVER PER W.G.C. SPECIFICATION 511 IMMEDIATELY AFTER STRESS RELIEVING & CLEANING
6. ALL SURFACES MARKED ✓ TO BE 125✓ EXCEPT AS NOTED
7. 37 DIA IS ROUND ± 5/8.

REF. INF 1176

NEXT ASSY 2150.283E002 (WGN102989)

FIND NO.	PART NO.	DESCRIPTION	QTY	MATERIAL	CODE IDENT
LIST OF MATERIAL (LM)					

LIMITS ON MACHINED DIMENSIONS EXCEPT AS NOTED
ANGULAR = ± 1° 0'
LINEAR:
.X = ± .1 .XXX = ± .010
.XX = ± .03 FRACTIONAL = ± 1/32
BREAK ALL SHARP EDGES
MATERIAL
SEE MATL LIST

150 IN STELLAR TELESCOPE MOUNTING

DRAWN FLAVIN 3-15-68
CHECK [illegible] 5-17-68
ENGR

WGT 107 690
APPROVED

western GEAR CORPORATION
HEAVY MACHINERY DIVISION
EVERETT, WASHINGTON

BAFFLE, CENTRAL
COUDE #3 ASSY

SIZE	CODE IDENT NO.		REV
D	16603	2150.283D004	B
SCALE 1/4	WT	LB	SHEET 1 OF 1

WESTERN GEAR CORPORATION
CONSTRUCTION PROJECTS DEPARTMENT
APPROVED FOR PROCUREMENT
PG DATE 11/21/68