REVISIONS				
ZONE	LTR	DESCRIPTION	DATE	APPROVED
	A	REVISED PER AURA APP'D FOR CONST. PRINT DATED 6 MAY 1968	TMO 1 1968	
BE	B	⊙D.002 TIR WAS: ⊙D.001, ⊙D.002 WAS: ⊙C.001	11/21/68	
SE	B	PICTORIAL CORRECTION & ADDED: TRUE		
	C	SEE SHEET 1 OF 2	1-24-69	

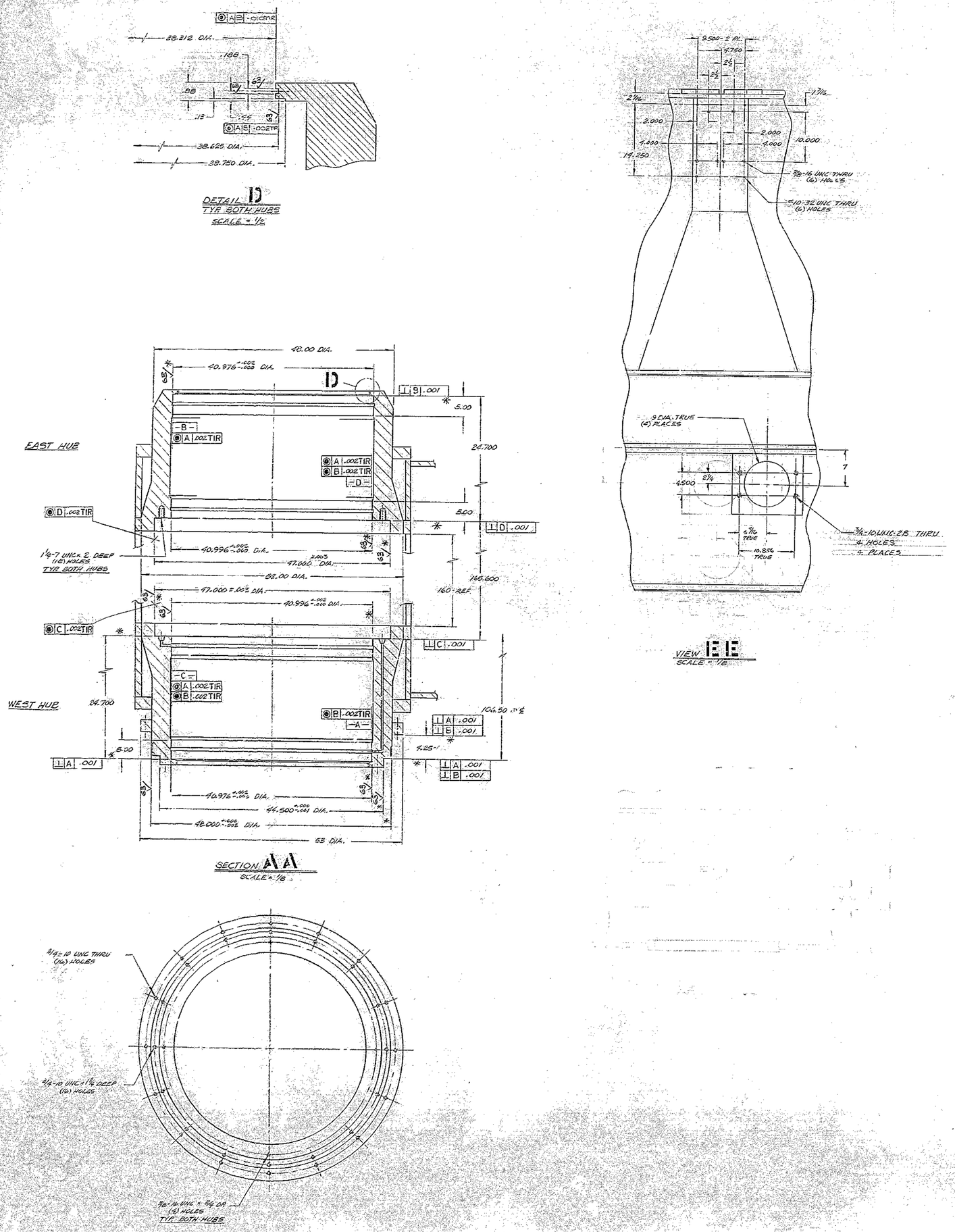

NEXT ASS'Y - 2150.281E001 (W.G. N102852)

REF. FILE 1175

FIND NO.	PART NO.	DESCRIPTION	QTY	MATERIAL	CODE IDENT

LIST OF MATERIAL (LM)

LIMITS ON MACHINED DIMENSIONS EXCEPT AS NOTED
ANGULAR = ± 1° 0'
LINEAR:
.X = ± .1 .XXX = ± .010
.XX = ± .03 FRACTIONAL = ± 1/32
BREAK ALL SHARP EDGES
MATERIAL

150th STELLAR TELESCOPE MOUNTING

DRAWN C. JOHNSON 6-1-68
CHECK
ENGR

W.G. N102949
APPROVED

WESTERN GEAR CORPORATION
HEAVY MACHINERY DIVISION
EVERETT, WASHINGTON

OUTLINE,
CENTER SECTION AND LOWER RING GIRDER ASS'Y

SIZE	CODE IDENT NO.		REV
E	16603	2150.281E101	D

SCALE WT LBS SHEET 2 OF 2