REVISIONS				
ZONE	LTR	DESCRIPTION	DATE	APPROVED
	A	ITEM "B" SEE WING PAEL		
	A	PRINT FOR CONST. PER ARRANGEMENT		
	B	ADDED VIEW U-U & SECT. V-V	5-9-6	
	C	REVISED PER ARR. APPD PRINT	7-17-71	
	E	SEE SHT 4	11-1-71	GR
	F	SEE SHT 3		
	G	SEE SHT 1		
REF.	H	ADDED P/N'S 152 & 153 & CALL OUT P/N 155. ADDED ADDITIONAL P/N'S 101 TO IDLE SPKT	3-8-72	JW
	J	SEE SHT 2		
	L	SHIMS REQ'D VIEW B-B SEE SHT 1	5-1-72	
	M	ADDED P/N 17A. CORRECTED PER DRAWING AS BUILT		
	N	DELETED SECT V-V, PROPOSAL CHANGE TO VIEW U-U	2-22-73	

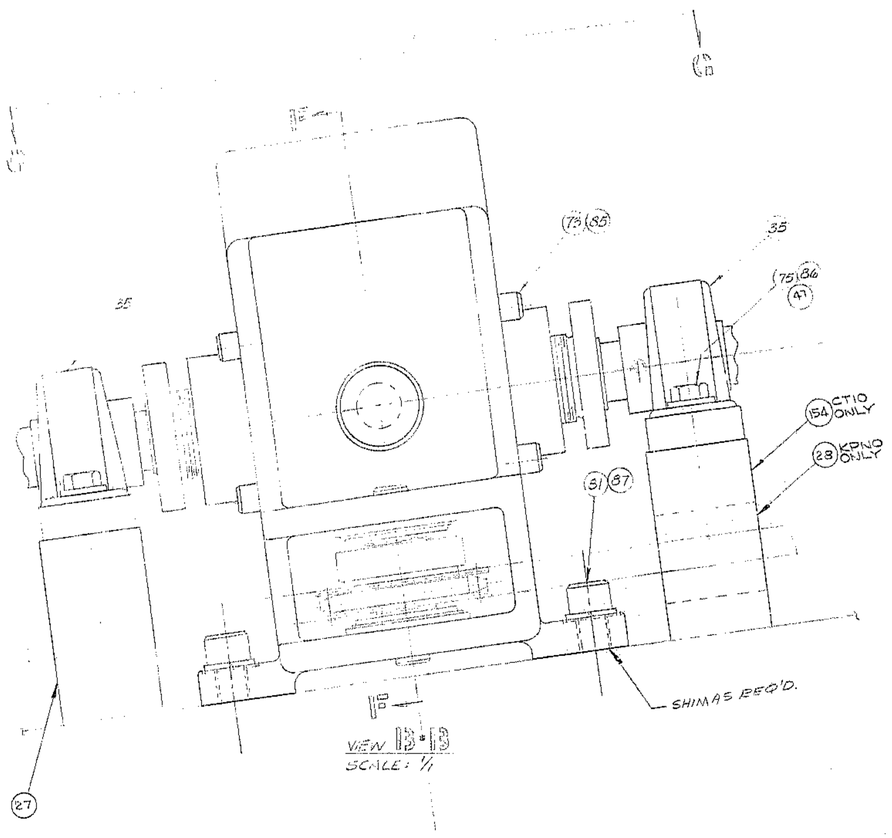

VIEW B-B
SCALE: 1/1

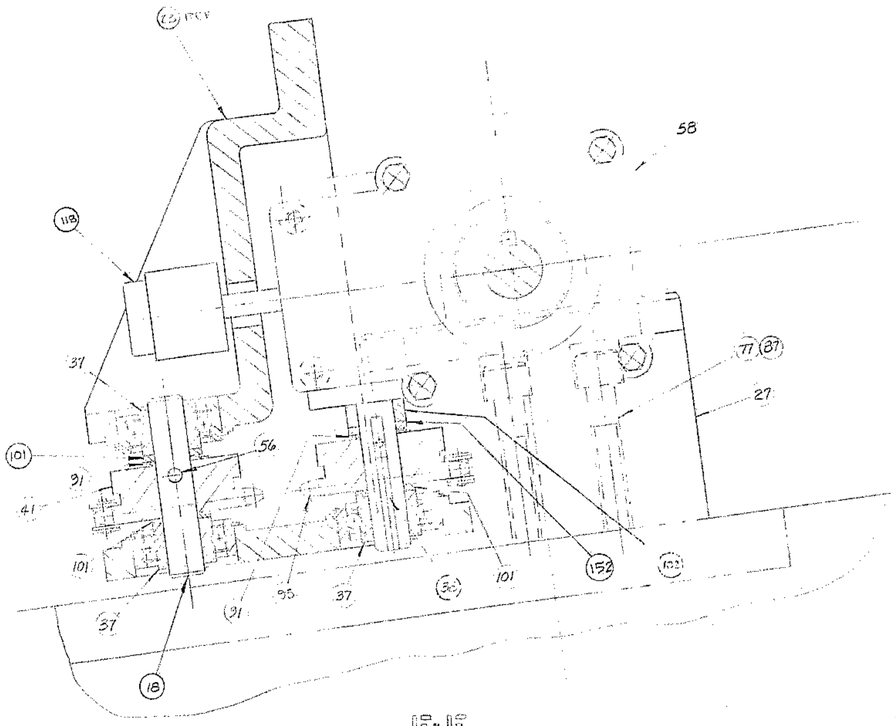

SECTION B-B
SCALE: 1/1

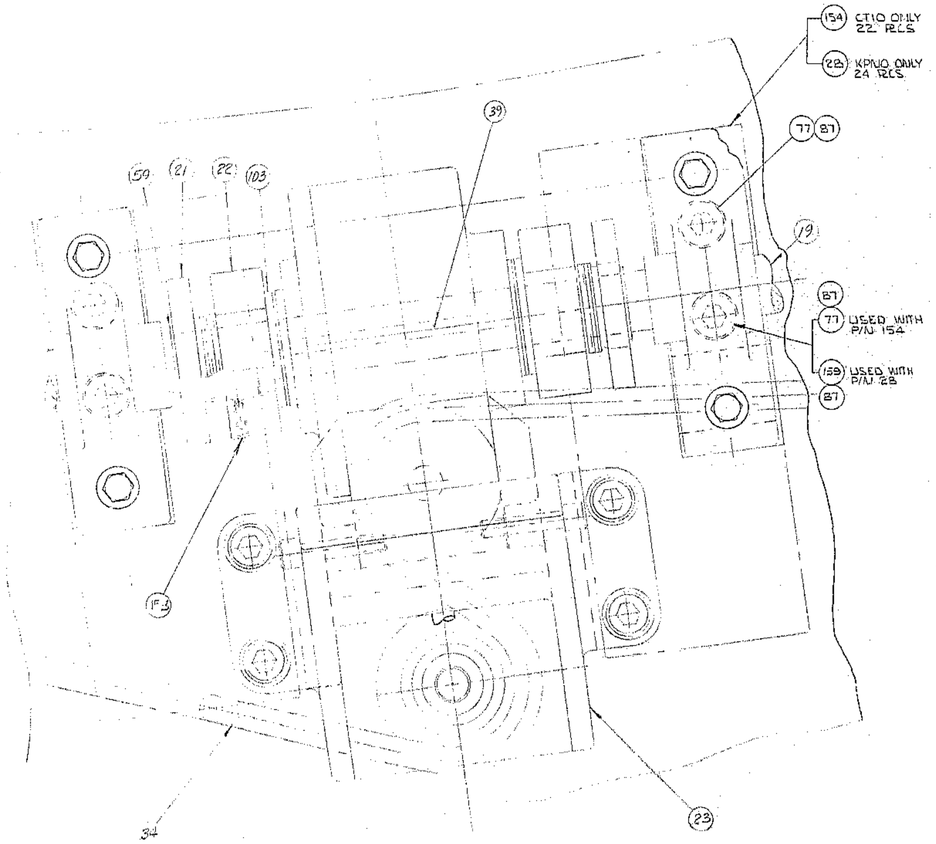

VIEW C-C
SCALE: 1/1

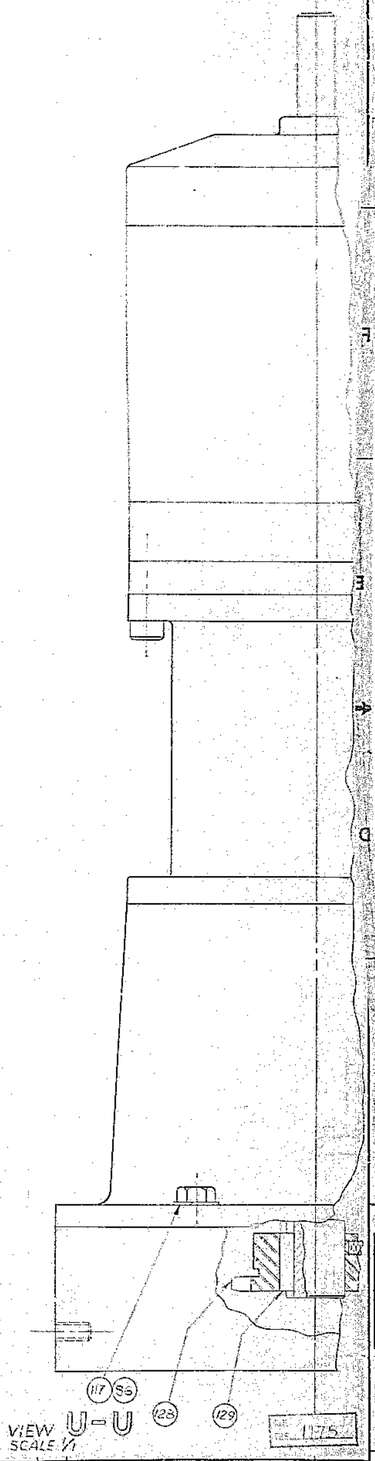

VIEW U-U
SCALE: 1/1

FIND NO.	PART NO.	DESCRIPTION	QTY.	MATERIAL	CODE IDENT

LIST OF MATERIAL (LM)

LIMITS ON MACHINED DIMENSIONS EXCEPT AS NOTED
ANGULAR = ± 1° 0'
LINEAR:
X = ± .1 XXX = ± .010
XX = ± .03 FRACTIONAL = ± 1/32
BREAK ALL SHARP EDGES
MATERIAL

150 KW STELLING TELESCOPE AUTO.

DRAWN
CHECK
ENGR

W.G.N. 103002

APPROVED

western GEAR CORPORATION
HEAVY MACHINERY DIVISION
EVERETT, WASHINGTON

ASSY
CENTER SECTION
& P.M. COVER

SIZE	CODE IDENT NO.		REV
E	16603	2150.28/E002	N

SCALE VARIES WT LB SHEET 5 OF 5

WESTERN GEAR CORPORATION
CONSTRUCTION PROJECTS
DEPARTMENT
APPROVED FOR
PROCUREMENT
DATE