REVISIONS				
ZONE	LTR	DESCRIPTION	DATE	APPROVED
7D	A	160.000 D BC WAS 167.500	10-7-68	
8A	A	2 1/2 WAS 2 5/8 2 3/16 WAS 2 1/4		
8/m	A	PC Nº 2 PL WAS 2 3/16 x 3/16 x 131		
	A	APPD PER AURA CONSTRUCTION PRINT 20-7-68	12-23-68	

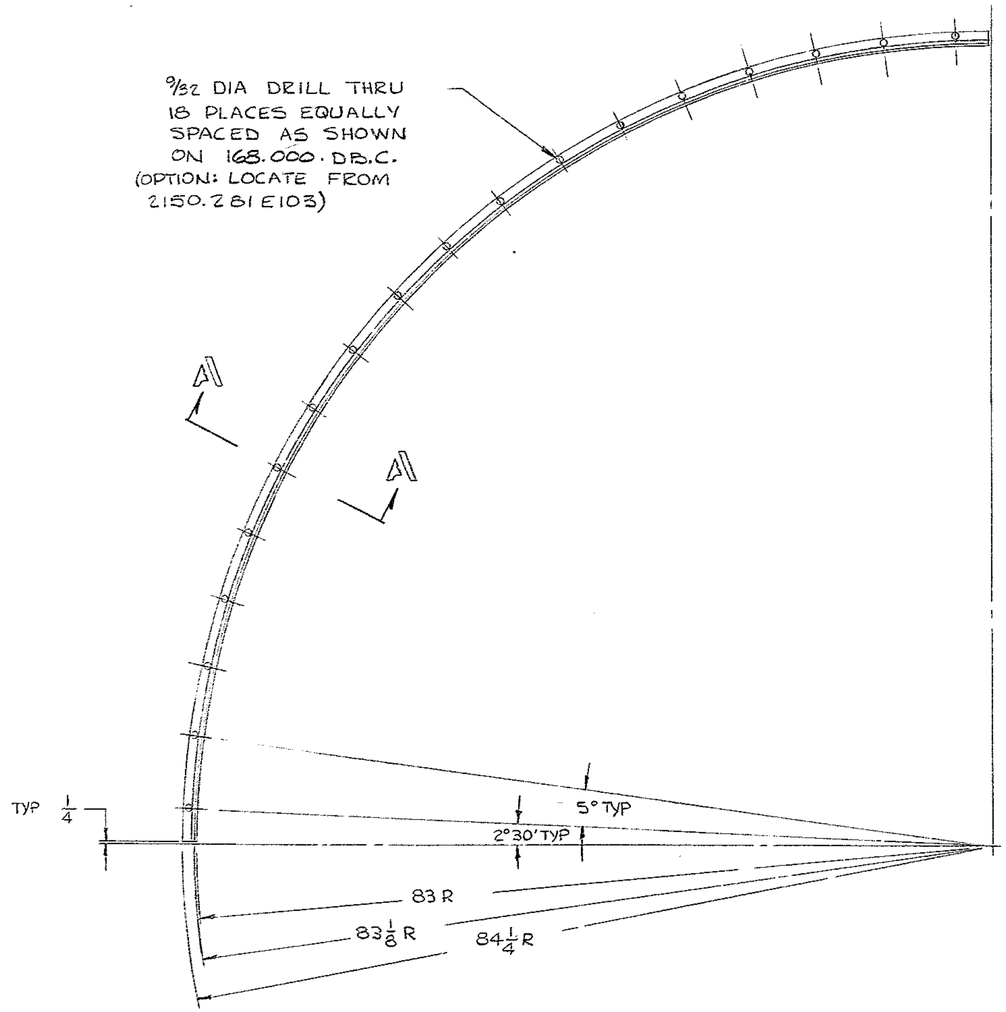

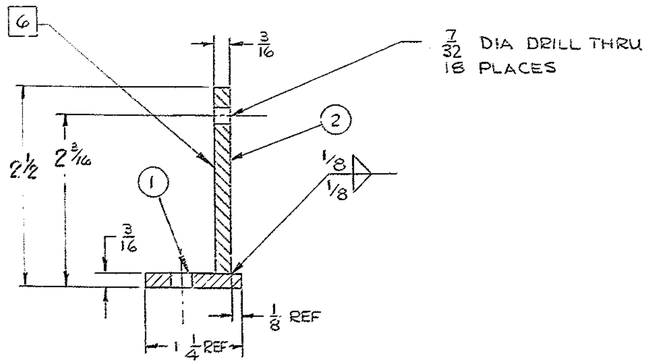

SECTION A-A
ROTATED 27° CCW
SCALE 1/1

MATERIAL LIST				
PC.NO.	QTY.	DESCRIPTION	MATL & SPEC	RG.WT.
1	1	PL 1 1/4 x 3/16 x 131 1/2	STL ASTM A-36	
2	1	PL 2 5/16 x 3/16 x 131	STL ASTM A-36	

NOTES:
1. ALL DIMENSIONS ARE IN INCHES.
2. FABRICATION TOLERANCE EXCEPT AS NOTED;
   UP TO 10 INCHES ± 1/16
   10 TO 50 INCHES ± 1/8
   50 INCHES AND OVER ± 1/4
3. WELD PER W.G.C. SPEC 752, APPENDIX T1
4. STRESS RELIEVE AFTER WELDING & BEFORE MACHINING PER WGC SPEC 510.
5. APPLY ONE (1) COAT PRIMER PAINT IMMEDIATELY AFTER STRESS RELIEF AND CLEANING PER W.G.C SPEC 511.
6. STAMP PART NO. 2150.281D016 APPROX AS SHOWN

NEXT ASSY: 2150.281E002 (W.G.N 103002)

1175

FIND NO.	PART NO.	DESCRIPTION	QTY	MATERIAL	CODE IDENT

LIST OF MATERIAL (LM)

WESTERN GEAR CORPORATION
CONSTRUCTION PROJECTS
DEPARTMENT
APPROVED FOR
PROCUREMENT
PG DATE 11/21/68

LIMITS ON MACHINED DIMENSIONS EXCEPT AS NOTED
ANGULAR = ± 1° 0'
LINEAR:
.X = ± .1 .XXX = ± .010
.XX = ± .03 FRACTIONAL = ± 1/32
BREAK ALL SHARP EDGES
MATERIAL
SEE MATL LIST

150 IN STELLAR
TELESCOPE MOUNTING

DRAWN R. Strong 5-21-68
CHECK 8-15-68
ENGR

W.G.E 107776
APPROVED

western GEAR CORPORATION
HEAVY MACHINERY DIVISION
EVERETT, WASHINGTON

BRACKET SEGMENT,
IRIS COVER

SIZE	CODE IDENT NO.		REV
D	16603	2150.281D016	A

SCALE 1/8 WT LB SHEET 1 OF 1