REVISIONS				
ZONE	LTR	DESCRIPTION	DATE	APPROVED
	A	REV'D PER AURA APP. PRINT		
D-5	B	23.937 WAS 24.000 15/16 WAS 1 3 11/16 WAS 3 3/4 4 7/16 WAS 4 1/2 38.235 WAS 38.250		
E-4				
G-5	C	13/16 WAS 1 1/4	11/18/70	
F-5	D	ADDED NOTE	12/28/72	
D-2	E	REVISE NOTE # 3		
H 8	F	ADDED DETAIL E, AS BUILT	10/4/11	
	H	ADDED AURA DWG NO TO NOTE 3	2-20-75	LDS

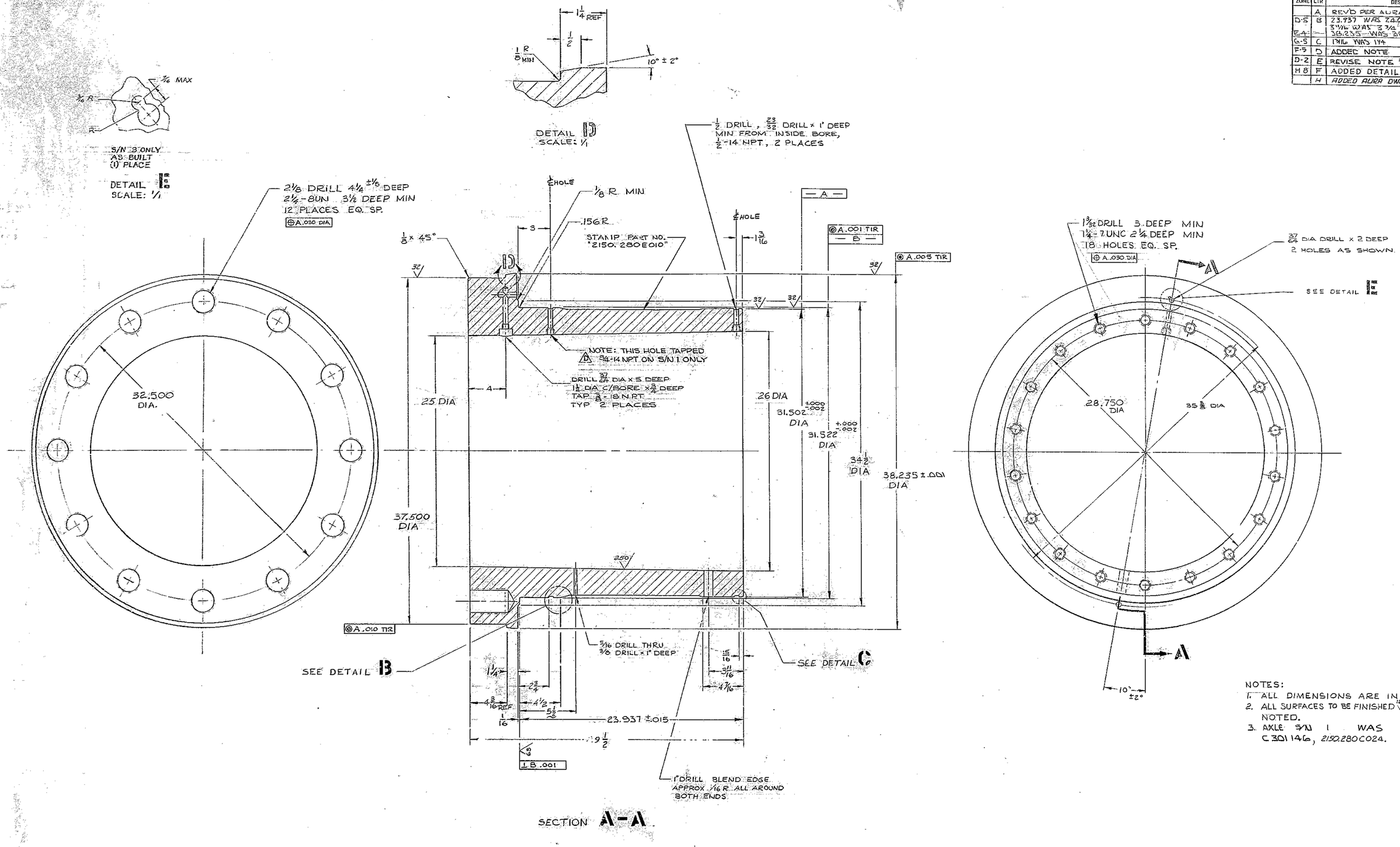

SECTION A-A

NOTES:
1. ALL DIMENSIONS ARE IN INCHES.
2. ALL SURFACES TO BE FINISHED 125 ALL OVER, EXCEPT AS NOTED.
3. AXLE S/N 1 WAS MODIFIED PER DWG. C301146, 2150.280C024.

DETAIL B
SCALE: 1/1

DETAIL C
SCALE: 1/1

NEXT ASSY: 2150.280E002 (W.G.N 102844)

SEQ. NO. 1174

FIND NO.	PART NO.	DESCRIPTION	QTY	MATERIAL	CODE IDENT

LIST OF MATERIAL (LM)

LIMITS ON MACHINED DIMENSIONS EXCEPT AS NOTED
ANGULAR = ± 1° 0'
LINEAR:
.X = ± .1 .XXX = ± .010
.XX = ± .03 FRACTIONAL = ± 1/32
BREAK ALL SHARP EDGES
MATERIAL
STL, FORGING ASTM A-243 GRADE C NORM. & TEMPER

150LB STELLAR TELESCOPE MTG.

DRAWN 9/23/68
CHECK 7AUG68
ENGR

W.G.N 102953
APPROVED

WESTERN GEAR CORPORATION
HEAVY MACHINERY DIVISION
EVERETT, WASHINGTON

AXLE, D.A. BEARING - CENTER SECTION

SIZE	CODE IDENT NO.		REV
E	16603	2150.280E010	F

SCALE 1/4 WT LB SHEET 1 OF 1

WESTERN GEAR CORPORATION
CONSTRUCTION PROJECTS DEPARTMENT
APPROVED FOR PROCUREMENT
DATE 9/30/68