BILL OF MATERIAL				
ITEM	QTY.	MATERIAL	DESCRIPTION	WEIGHT

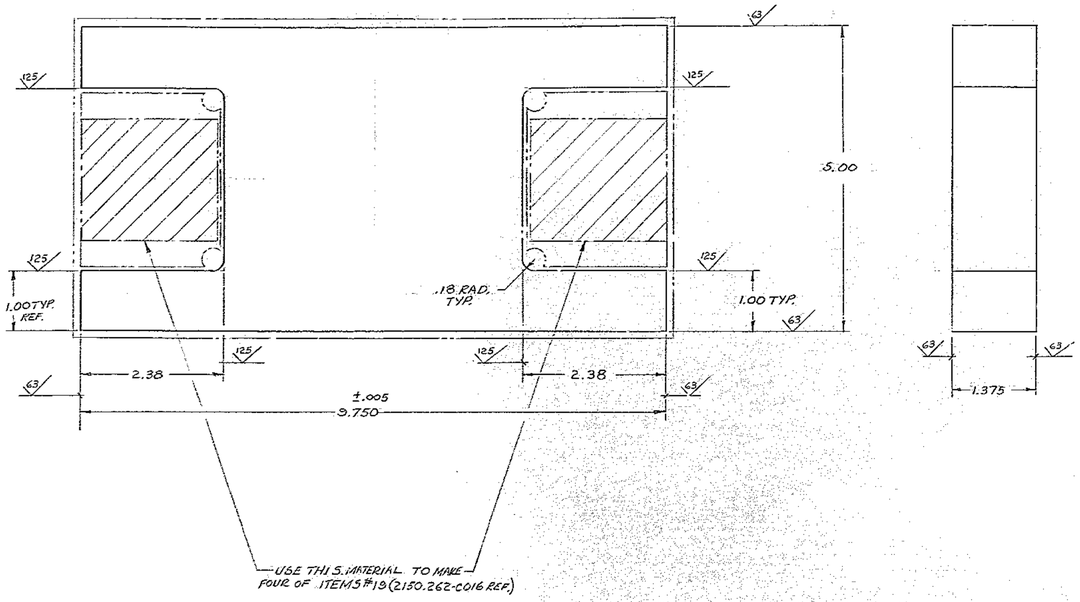

FINISH CONTOUR AND SALVAGE PLAN
MATERIAL: INVAR FM ANNEALED FORGING.
ROUGH SIZE $1\frac{1}{2} \times 10 \times 5\frac{1}{4}$

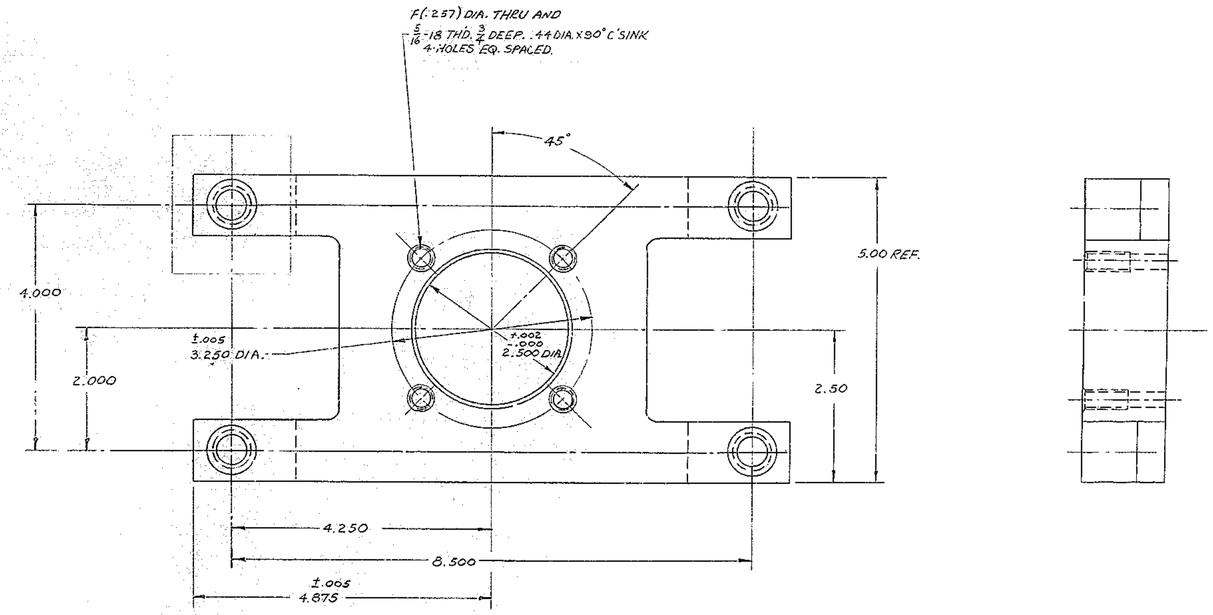

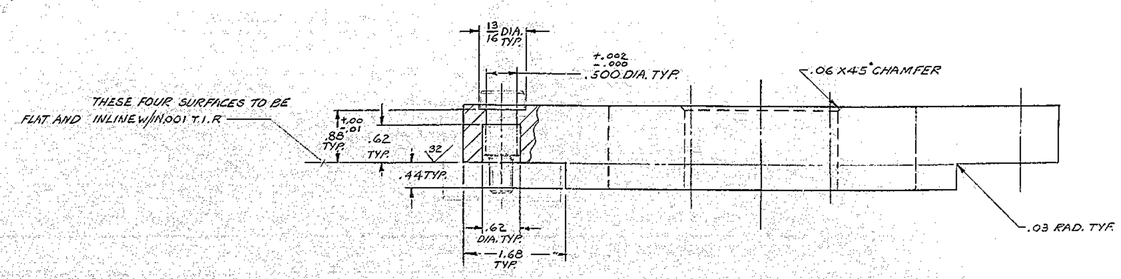

ITEM #18

FOR ASSEMBLY SEE 2150.262-E002

LET.	REVISION	CCR	DATE	BY

TOLERANCES UNLESS OTHERWISE NOTED.
DECIMAL DIMENSIONS
00.00 ± .010
.00.000 ± .003
FRACTIONAL DIMENSIONS
UP TO 10" ± 1/64
10" TO 50" ± 1/32
50" & OVER ± 1/16
BREAK SHARP EDGES .02
ALL SURFACES 125 TO HAVE √ FINISH UNLESS OTHERWISE NOTED.

KITT PEAK NATIONAL OBSERVATORY
OPERATED BY THE
ASSOCIATION OF UNIVERSITIES FOR RESEARCH IN ASTRONOMY, INC.
UNDER CONTRACT WITH
NATIONAL SCIENCE FOUNDATION

150 IN. STELLAR TELESCOPE — K.P.O. FILE 1173
NAME: MIRROR PAD BASE — SCALE: FULL
PRIMARY MIRROR EDGE SUPPORT — PRINT ISSUED

DESIGNED BY	DATE	APPROVED BY	DATE	DRAWING NUMBER	REV.
[illegible]	12-8-67	[illegible]	12-21-67	2150.262-E006	
DRAWN BY [illegible]	DATE 12-8-67	APPROVED BY [illegible]	DATE [illegible]		
CHECKED BY [illegible]	DATE [illegible]	APPROVED BY [illegible]	DATE 12-18-67		

5/69 DIETERICH POST CLEARPRINT 1010