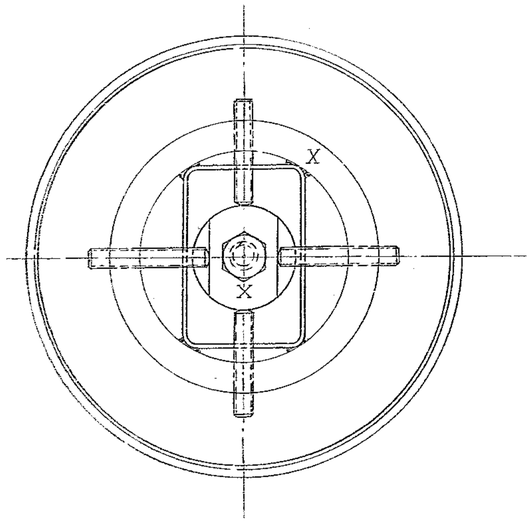


VIEW 13 ~ 13

ITEM #22 REMOVED FOR CLARITY

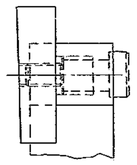

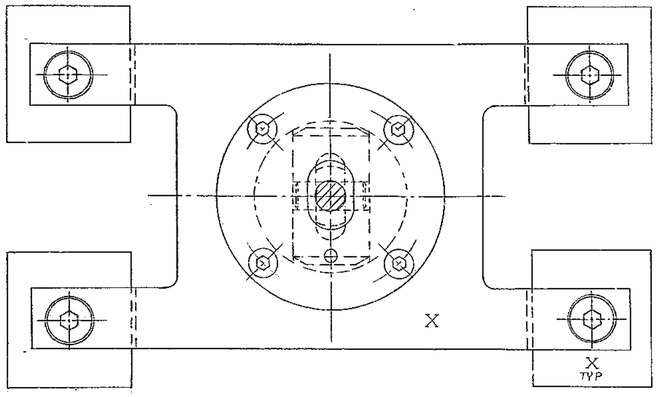


SECTION 15 ~ 15

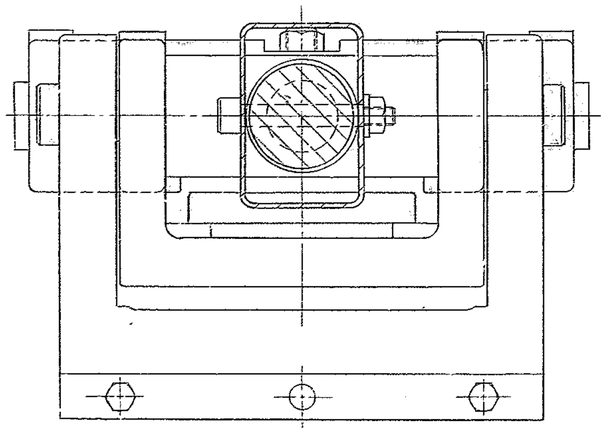

SECTION 6 ~ 6

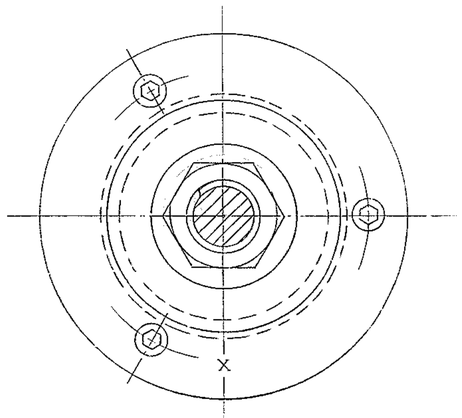


SECTION 17 ~ 17

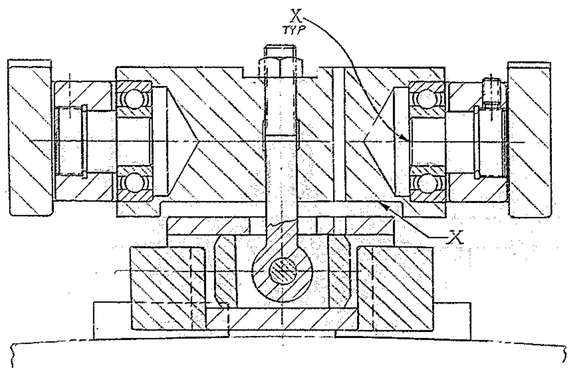


SECTION 13 ~ 13

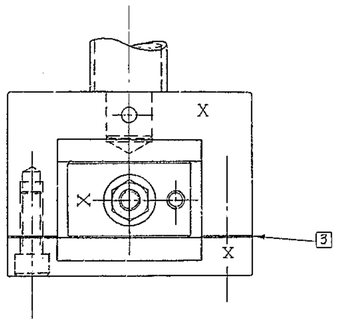


VIEW 6 ~ 6

## BILL OF MATERIAL

| | ITEM | QTY. | MATERIAL | DESCRIPTION | WEIGHT |
|---|---|---|---|---|---|
| $D_1$ | 1 | 1 | 2150.262-E003 | COUNTER WEIGHT ARM KPNO | |
| | 3 | 1 | -E005 | PIVOT FRAME | |
| | 4 | 1 | -D008 | COUNTER WEIGHT LEVER | |
| | 5 | 1 | -D009 | PIVOT YOKE | |
| | 6 | 2 | -B018 | PIVOT YOKE SHAFT - SUB ASSY | |
| | 7 | 2 | -B019 | PAD SUPPORT SHAFT - SUB ASSY | |
| | 8 | 1 | -D010 | PAD BEARING SUPPORT | |
| | 9 | 1 | -B021 | ANCHOR PIVOT | |
| | 10 | 1 | -B020 | ANCHOR ADJUSTING SCREW | |
| | 11 | 1 | -C012 | RING GIRDER PLUG | |
| | 12 | 1 | -C013 | ANCHOR BLOCK | |
| | 13 | 2 | -B022 | ANCHOR BAR SHIM | |
| | 14 | 1 | -C014 | ANCHOR BAR | |
| $D_1$ | 15 | 1 | -C015 | PAD BASE PLUG-SUBASSEMBLY | |
| | | | | | |
| | 18 | 1 | -E006 | MIRROR PAD BASE | |
| $D_2$ | 19 | 4 | -C016 | MIRROR PAD | |
| | 20 | 2 | | 1/4-20 HEX NUT | |
| (5 NOMINAL REQ'D. REF.) | 21 | 1 | -E007 | SUPPORT BRACKET | |
| | 22 | AS REQ'D | -B024 | TRIM WEIGHT | |
| | 23 | 4 | -B025 | BALL BEARING | |
| $D_2$ | 24 | 2 | STEEL | 5/16-18 X 1 3/4 LG. OVAL PT. SOC. SET SCREW | |
| | 25 | 2 | " | 5/16-18 X 2 LG OVAL PT. SOC SET SCR. | |
| | 26 | 2 | AMERICAN # ACB-3145 | 3/4 DIA. X 3/4 LG. SOC. HD. SHOULDER SCREW | |
| | 27 | 1 | STEEL | 5/16 LOCK WASHER | |
| | 28 | 1 | " | 5/16-18 HEX. NUT | |
| | 29 | 1 | DANLY #9-0614-56 | 3/8 DIA. X 2 LG. SOC. HD. SHOULDER SCREW | |
| | 30 | 1 | | 1/2-13 X 1 1/2 LG. HEX. HD. SCREW | |
| | 31 | 1 | DANLY #9-0816-56 | 1/2 DIA. X 2 LG. SOC HD. SHOULDER SCREW | |
| | 32 | 1 | STEEL | 3/8 FLAT WASHER | |
| | 33 | 1 | " | 3/8-16 HEX. NUT | |
| | 34 | 1 | " | 1/4 DIA. X 3/4 LG. DOWEL | |
| | 35 | 4 | " | 3/8-16 X 1 LG SOC HD. CAP SCREW | |
| | 36 | 1 | " | 1 1/4-12 HEX. JAM NUT | |
| | 37 | 1 | " | 1/4 DIA. X 1 1/2 DOWEL | |
| | 38 | 1 | " | 1/2-13 HEX. JAM NUT | |
| $D_1$ | 39 | 4 | " | 5/16-18 X 3/4 SOC. HD. CAP SCREW | |
| | | | | | |
| | 42 | 4 | " | TRUARC SELFLOCKING RING # 5105-37 | |
| | 43 | 4 | " | 1/2 DIA. X 3/4 LG SOC HD. SHOULDER SCR. | |
| $D_2$ | 44 | 2 | " | 1/4-20 X 1 3/4 LG HEX HD. MACHINE SCREW | |
| | 45 | 6 | " | 5/16-18 X 1/2 NYLOK NO MAR SOC SET SCREW | |
| $D_1$ | 46 | 4 | " | 1/4-20 X 3/4 LG. SOC. HD. OVAL PT. SET SCR. | |

QUANITIES SHOWN ARE FOR 1-UNIT ONLY.
24-UNITS REQ'D PER TELESCOPE. KPNO

1. DRYLUBE SURFACES WITH DOW CORNING MOLYKOTE BRAND Z POWDER.

$D_3$ 2. ALL 24 UNITS TO BE ASSIGNED A UNIT NUMBER 1K THRU 24K (K INDICATES KPNO). STAMP UNIT NUMBER MARKS ON INDIVIDUAL ITEMS AT X.

3. DETERMINE THICKNESS AT ASSY TO OBTAIN A SNUG SLIP FIT.

$D_4$

| LET. | REVISION | ECR | DATE | BY |
|---|---|---|---|---|
| X | SEE SH. 1 FOR REVISIONS ON | 0526 | 8-17-70 | D.L.P. |
| X | SEE SH. 1 FOR REVISIONS ON | 0457 | 2-16-70 | D.L.P. |
| X | SEE SH. 1 FOR REVISIONS ON | 0376 | 12-12-69 | D.L.P. |

$D_3$ $D_4$ $D_1$ $D_2$ $D_3$

FOR ASSEMBLY SEE

TOLERANCES UNLESS OTHERWISE NOTED.
DECIMAL DIMENSIONS 00.00 ±.010, 00.000 ±.003
FRACTIONAL DIMENSIONS UP TO 18" ± 1/64, 18" TO 50" ± 1/32, 50" & OVER ± 1/16
BREAK SHARP EDGES
ALL SURFACES TO HAVE 125 FINISH UNLESS OTHERWISE NOTED.

**KITT PEAK NATIONAL OBSERVATORY**
OPERATED BY THE ASSOCIATION OF UNIVERSITIES FOR RESEARCH IN ASTRONOMY, INC. UNDER CONTRACT WITH NATIONAL SCIENCE FOUNDATION

150IN. STELLAR TELESCOPE — REF FILE 1173
NAME PRIMARY MIRROR EDGE SUPPORT ASSY. (KPNO) — SCALE FULL — PRINT ISSUED

DESIGNED BY — DATE 7-19-67 — APPROVED BY — DATE
DRAWN BY — DATE 7-19-67 — APPROVED BY — DATE
CHECKED BY — DATE 7-19-67 — APPROVED BY — DATE

DRAWING NUMBER 2150.262-E002 — REV. E

SHEET #2 OF 2

4/69 D.ETCHUCHPOST CLEARPRINT 1020