BILL OF MATERIAL				
ITEM	QTY.	MATERIAL	DESCRIPTION	WEIGHT

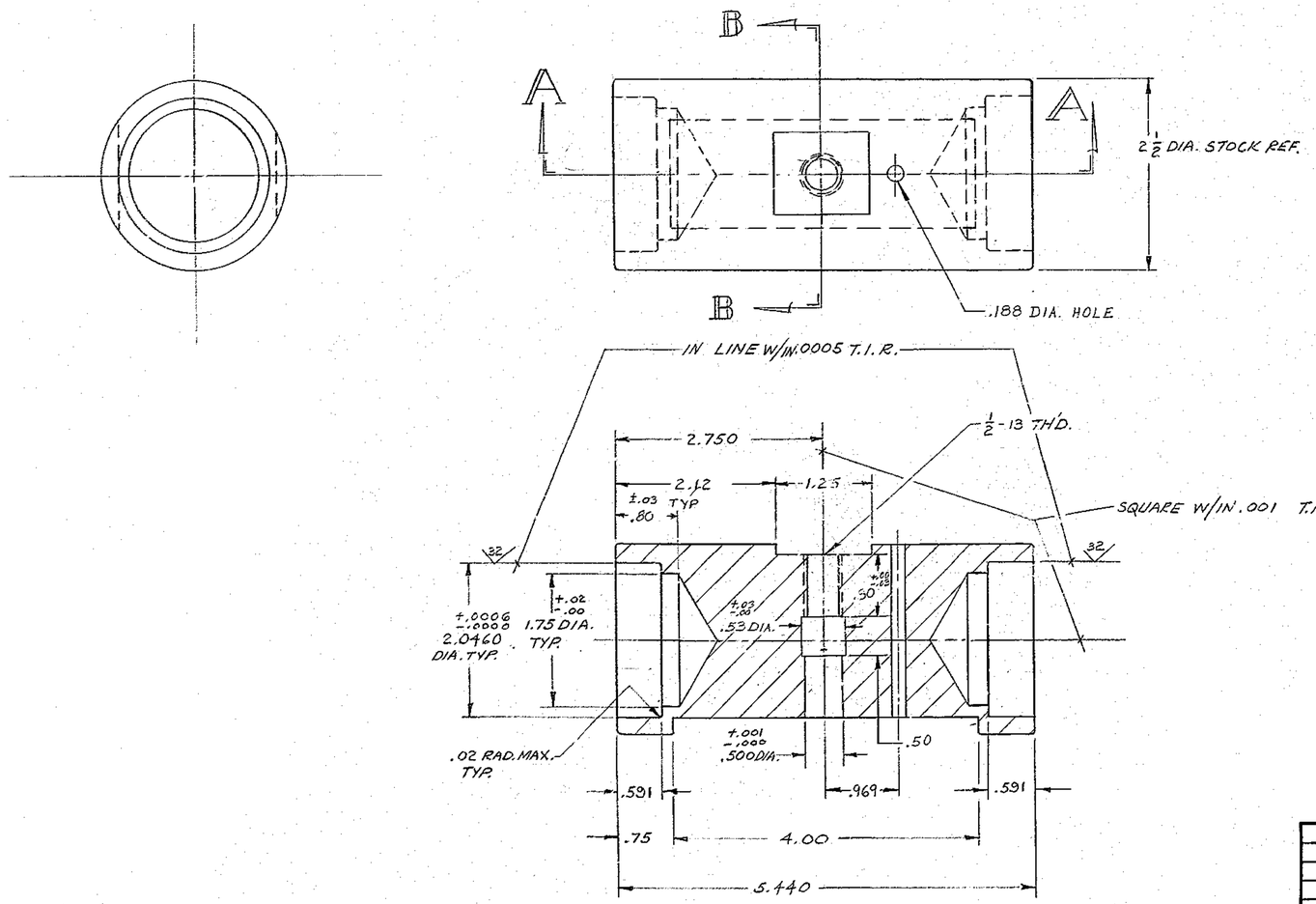

SECTION A A

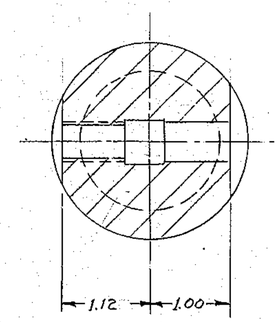

SECTION B-B

MATERIAL: 2 1/2 DIA. TURNED AND GROUND C1020 STEEL SHAFTING.

FINISH: BLACK OXIDE

ITEM #8

FOR ASSEMBLY SEE 2150.262-E002 & 2150.262-E102

LET.	REVISION	ECR	DATE	BY
A	REVISED AS BUILT	0529	8-17-70	D.L.B.

TOLERANCES UNLESS OTHERWISE NOTED
DECIMAL DIMENSIONS
00.00 ±.010
00.000 ±.003
FRACTIONAL DIMENSIONS
UP TO 18" ± 1/64
18" TO 50" ± 1/32
50" & OVER ± 1/16
BREAK SHARP EDGES -.02
ALL SURFACES TO HAVE 125/ FINISH UNLESS OTHERWISE NOTED.

KITT PEAK NATIONAL OBSERVATORY
OPERATED BY THE
ASSOCIATION OF UNIVERSITIES FOR RESEARCH IN ASTRONOMY, INC.
UNDER CONTRACT WITH
NATIONAL SCIENCE FOUNDATION

150 IN. STELLAR TELESCOPE — REF. FILE 1173
NAME PAD BEARING SUPPORT — SCALE FULL
PRIMARY MIRROR EDGE SUPPORT — PRINT ISSUED

	DATE		DATE	DRAWING NUMBER	REV.
DESIGNED BY	10-9-69	APPROVED BY	10-23-69	2150.262-D010	A
DRAWN BY	10-7-69	APPROVED BY	11-24-69		
CHECKED BY	11-17-69	APPROVED BY	10-15-69		

4/69 DIETERICH-POST CLEARPRINT 1020