BILL OF MATERIAL

ITEM	QTY.	MATERIAL	DESCRIPTION	WEIGHT

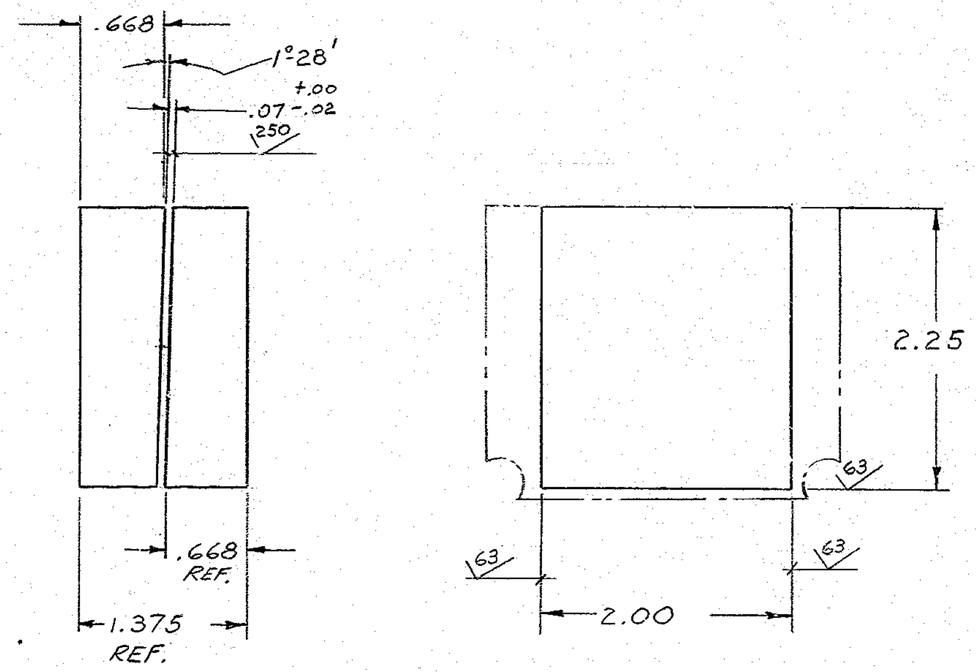

INVAR FM.
MATERIAL: SALVAGE FROM ITEM #18 (2150.262-E006 REF)
1-PIECE MAKES 2

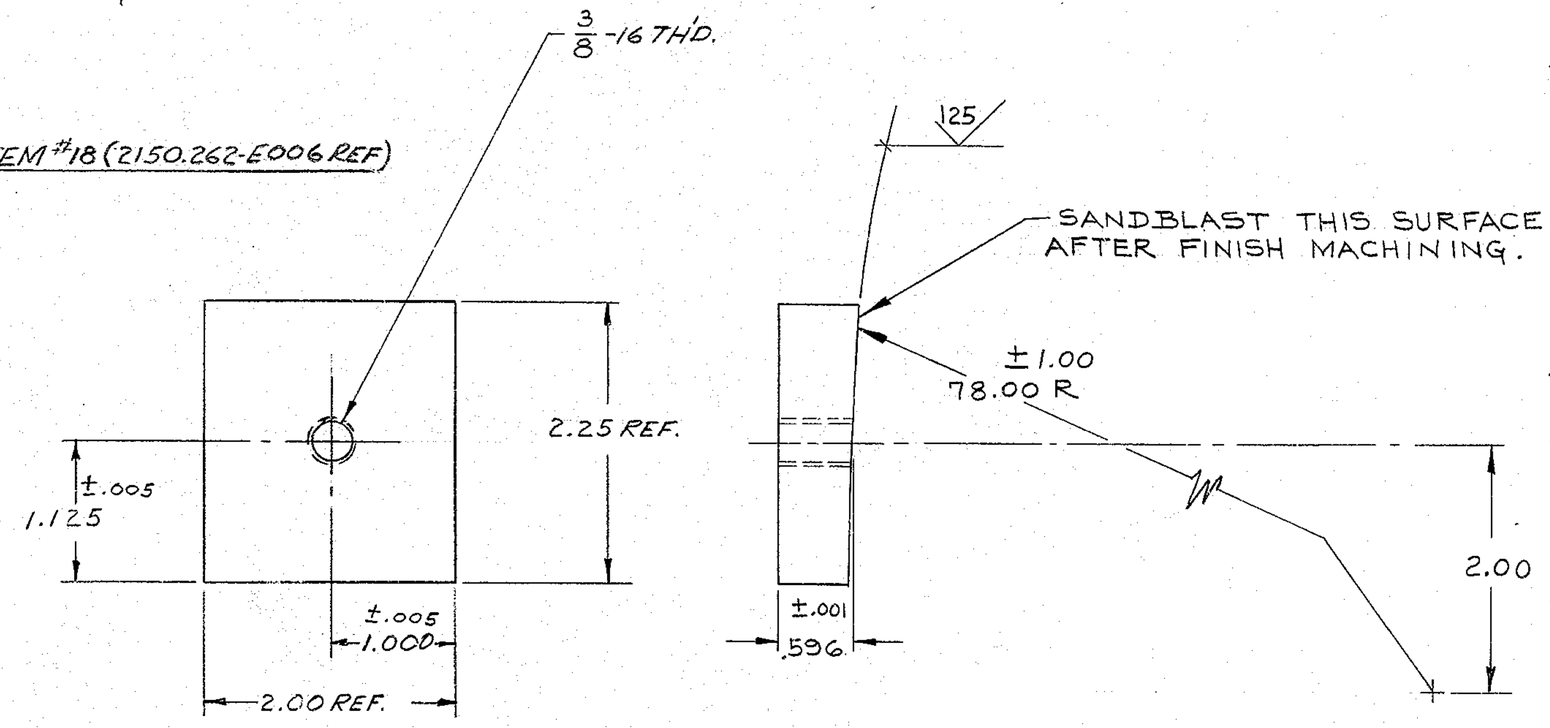

ITEM #19

FOR ASSEMBLY SEE 2150.262-E002

LET.	REVISION	ECR	DATE	BY
A.	REVISED AS BUILT	0529	8-17-70	L.B. DLB

TOLERANCES UNLESS OTHERWISE NOTED
DECIMAL DIMENSIONS
00.00 ± .010
00.000 ± .003
FRACTIONAL DIMENSIONS
UP TO 18" ± 1/64
18" TO 50" ± 1/32
50" & OVER ± 1/16
BREAK SHARP EDGES .02
ALL SURFACES TO HAVE 125 ✓ FINISH UNLESS OTHERWISE NOTED.

KITT PEAK NATIONAL OBSERVATORY

OPERATED BY THE
ASSOCIATION OF UNIVERSITIES FOR RESEARCH IN ASTRONOMY, INC.
UNDER CONTRACT WITH
NATIONAL SCIENCE FOUNDATION

150 IN. STELLAR TELESCOPE — REF. FILE 1173

NAME MIRROR PADS — SCALE FULL

PRIMARY MIRROR EDGE SUPPORT — PRINT ISSUED

DESIGNED BY	DATE	APPROVED BY	DATE
R Evans	10-8-69	[illegible]	10-23-69
DRAWN BY	DATE	APPROVED BY	DATE
R Evans	10-8-69	[illegible]	11/24/69
CHECKED BY	DATE	APPROVED BY	DATE
M Olsen	11/17/68	[illegible]	10-15-69

DRAWING NUMBER 2150.262-C016 — REV. A

4/69 DIETERICH-POST C/EARPRINT 1020