BILL OF MATERIAL

ITEM	QTY.	MATERIAL	DESCRIPTION	WEIGHT
1	1	2150.262-D.011	PAD BASE PLUG	
2	1	2150.262-B023	BASE SWIVEL	
3	1	- B.026	EYE BOLT. CARR LANE #CL-50 EB (ALTER)	
4	1		7/16 DIA. X 1 1/4 LG DOWEL	

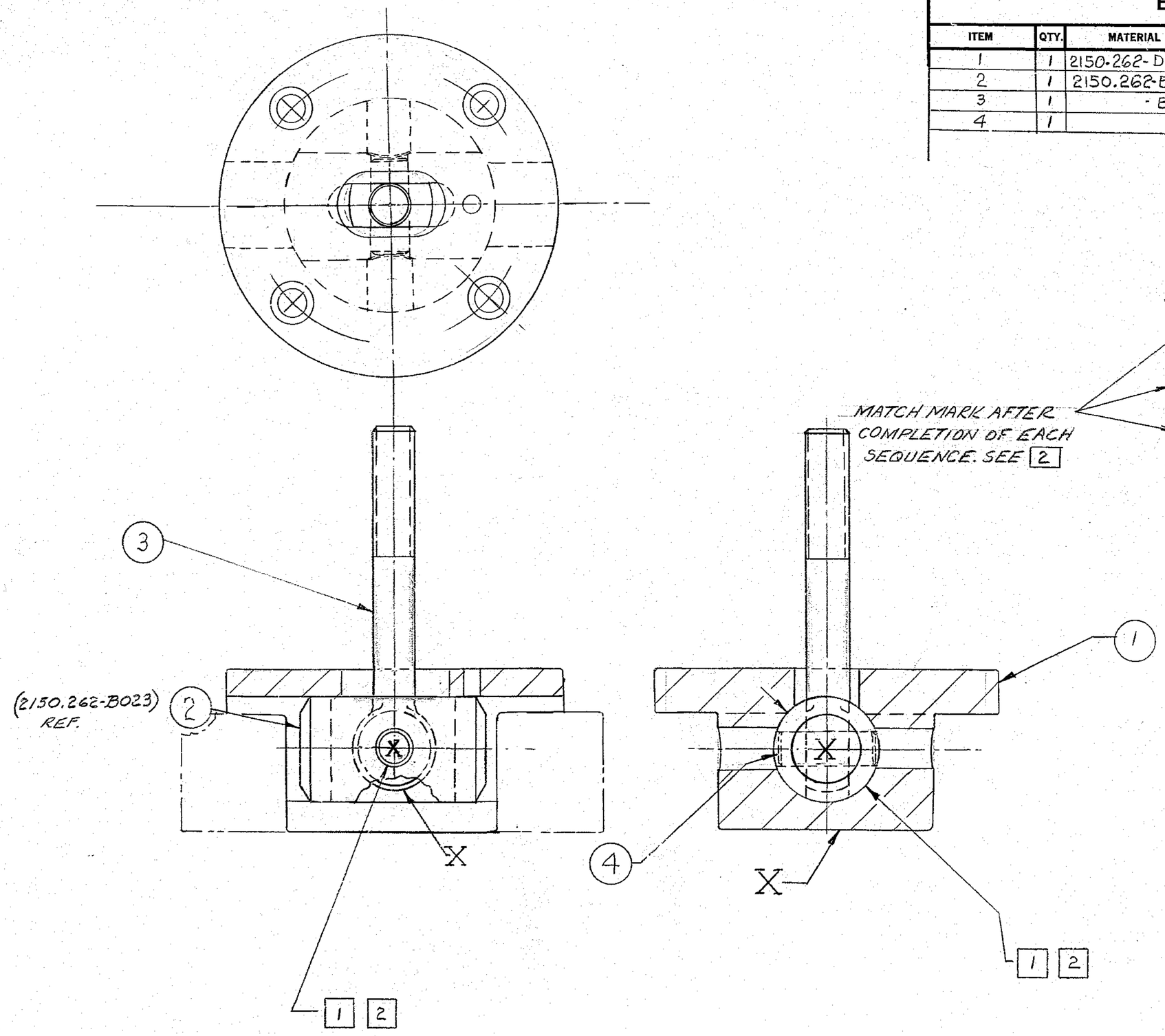

MATCH MARK AFTER COMPLETION OF EACH SEQUENCE. SEE 2

SEQUENCE

1. FIT ITEM 1 & 2 TO OBTAIN A SNUG SLIP FIT.
2. USING ITEM 4, - REAM ITEM 2 TO OBTAIN A PRESS FIT & GR. ITEM 4 TO ALLOW ITEM 2 TO ROTATE FREELY
3. USING ITEM 3, - REAM 3/8 HOLE OVERSIZE FOR ITEM 4, TO OBTAIN A SNUG SLIP FIT.

1 SEE 2150.262-E002 SH # 2 FOR LUBE SPEC.

2 STAMP NUMBERED (SEE DWG #2150.262-E002 SHEET 2 OF 2) UNIT - MARKS AT X ON ALL MATING PARTS FOR PROPER ASSEMBLY.

FOR ASSEMBLY SEE 2150.262-E002 & 2150.262-E102.

LET.	REVISION	ECR	DATE	BY
A3	ITEMS, 1 THRU, 4 WAS ITEMS 16 & 17, - 40 & 41 - 2150.262-002	0437	2-12-70	DMcK L.B.
A2	7/16 DIA DOWEL WAS 3/8 D. ROD	0437	2-12-70	DMcK
A1	ADDED STOCK LIST	"	"	

TOLERANCES UNLESS OTHERWISE NOTED

DECIMAL DIMENSIONS 00.00 ± .010 00.000 ± .003

FRACTIONAL DIMENSIONS UP TO 18" ± 1/64 18" TO 50" ± 1/32 50" & OVER ± 1/16

BREAK SHARP EDGES

ALL SURFACES TO HAVE 125 FINISH UNLESS OTHERWISE NOTED.

KITT PEAK NATIONAL OBSERVATORY

OPERATED BY THE ASSOCIATION OF UNIVERSITIES FOR RESEARCH IN ASTRONOMY, INC. UNDER CONTRACT WITH NATIONAL SCIENCE FOUNDATION

150 IN. STELLAR TELESCOPE — REF. FILE 1173

NAME PAD BASE PLUG SUBASS'Y. PRIMARY MIRROR EDGE SUPT.

SCALE FULL

PRINT ISSUED

DESIGNED BY	DATE	APPROVED BY	DATE
R.J. Hamm	10-10-69	[illegible]	10-23-69
DRAWN BY	DATE	APPROVED BY	DATE
R.J. Hamm	10-10-69	ZKR	11/24/69
CHECKED BY	DATE	APPROVED BY	DATE
[illegible]	11-17-69	[illegible]	10-15-69

DRAWING NUMBER 2150.262-C015 — REV. A

4/69 DIETERICH-POST CLEARPRINT 1020