BILL OF MATERIAL

ITEM	QTY.	MATERIAL	DESCRIPTION	WEIGHT

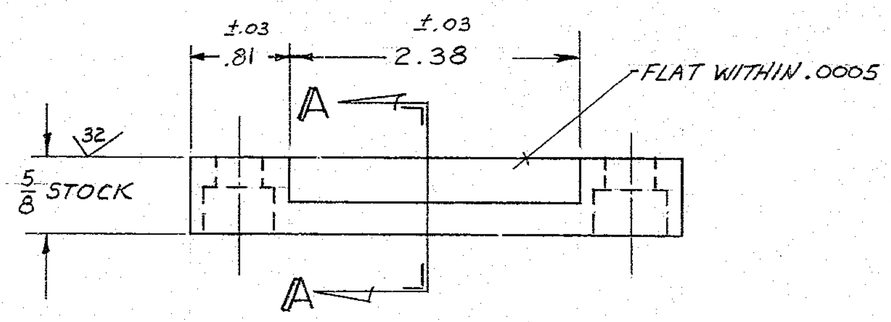

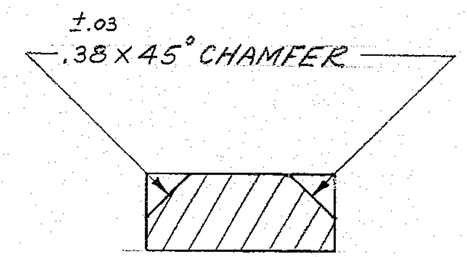

SECTION A-A

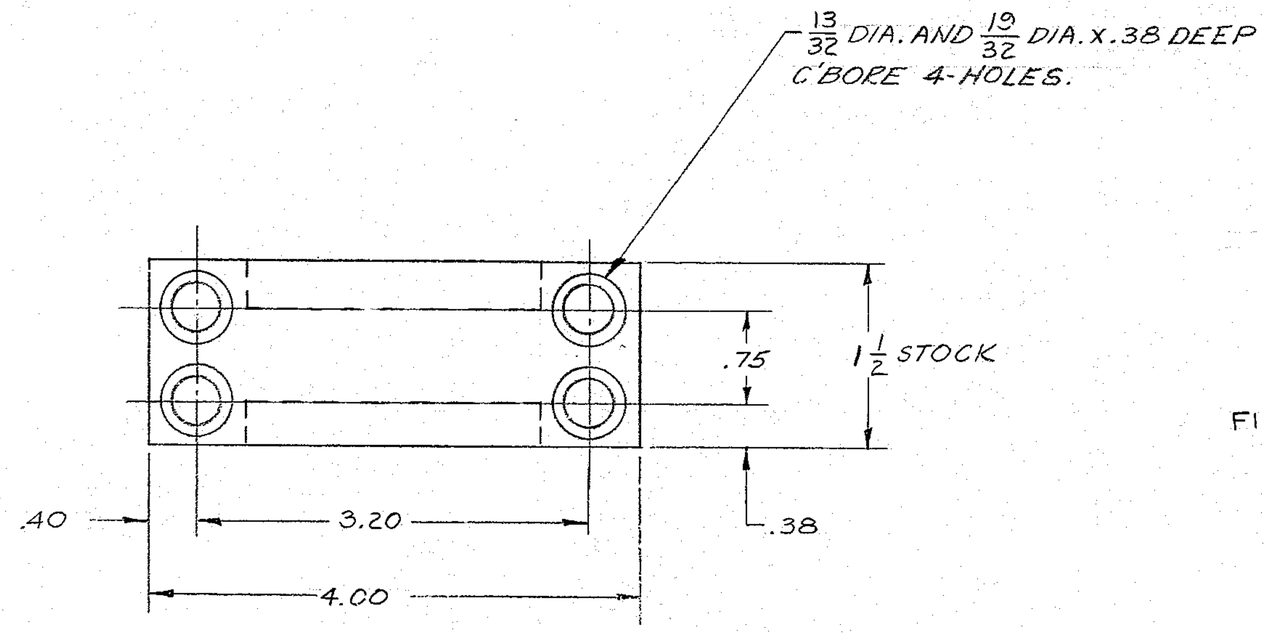

MATERIAL: STARRETT GROUND STOCK
#496 (OIL HARDENING) OR EQUAL.
HDN. & DRAW TO R_c 58/60.

FINISH: HARD CHROME .0005-.001 THICK

ITEM #14

FOR ASSEMBLY SEE 2150.262-E002

LET.	REVISION	ECR	DATE	BY
A	REVISED AS BUILT	0529	8-17-70	L.B. DLB

TOLERANCES UNLESS OTHERWISE NOTED

DECIMAL DIMENSIONS
00.00 ± .010
00.000 ± .003

FRACTIONAL DIMENSIONS
UP TO 18" ± 1/64
18" TO 50" ± 1/32
50" & OVER ± 1/16

BREAK SHARP EDGES .02

ALL SURFACES TO HAVE 125 √ FINISH UNLESS OTHERWISE NOTED.

KITT PEAK NATIONAL OBSERVATORY
OPERATED BY THE
ASSOCIATION OF UNIVERSITIES FOR RESEARCH IN ASTRONOMY, INC.
UNDER CONTRACT WITH
NATIONAL SCIENCE FOUNDATION

150 IN. STELLAR TELESCOPE

NAME ANCHOR BAR
PRIMARY MIRROR EDGE SUPPORT

REF. FILE 1173
SCALE FULL
PRINT ISSUED

DESIGNED BY	DATE	APPROVED BY	DATE
[illegible]	10-9-69	[illegible]	10-23-69
DRAWN BY	DATE	APPROVED BY	DATE
[illegible]	10-9-69	[illegible]	11/24/68
CHECKED BY	DATE	APPROVED BY	DATE
[illegible]	11-17-69	[illegible]	10-15-69

DRAWING NUMBER 2150.262-C014
REV. A

4/69 DIETERICH-POST CLEARPRINT 1020