BILL OF MATERIAL

ITEM	QTY.	MATERIAL	DESCRIPTION	WEIGHT

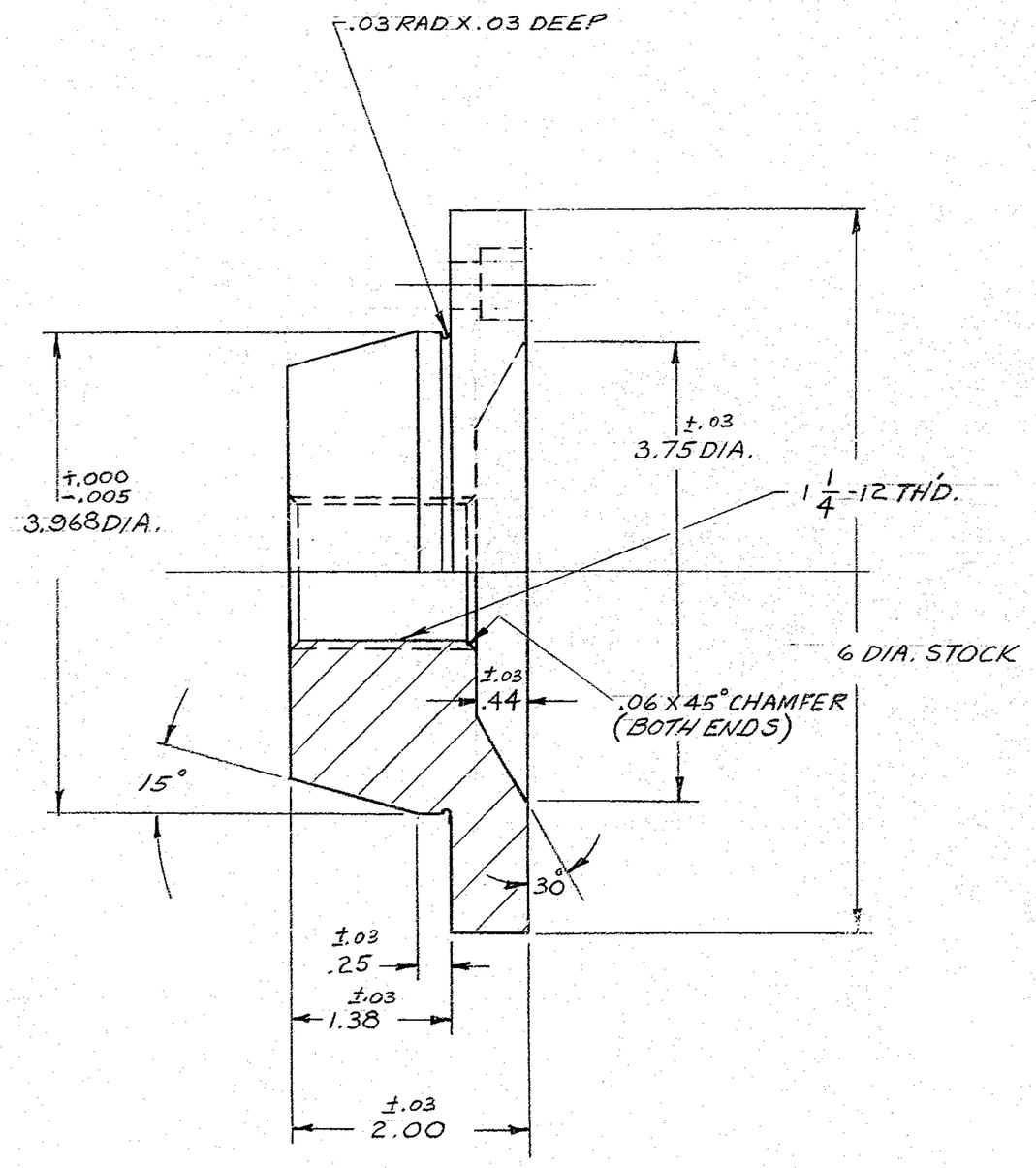

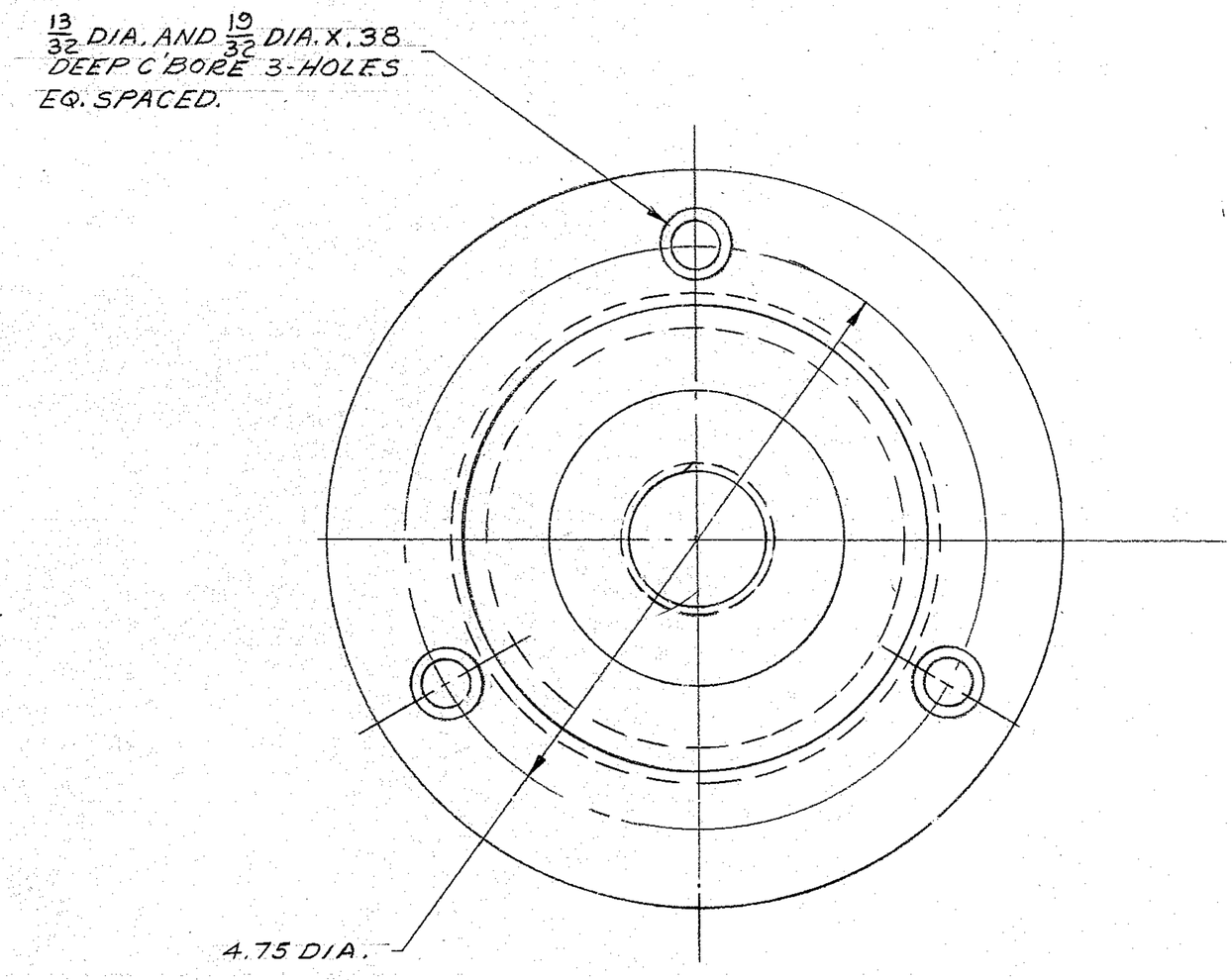

MATERIAL: C1018 STEEL
FINISH: CADMIUM PLATE.

ITEM # 11

FOR ASSEMBLY SEE 2150.262-E002

LET.	REVISION	ECR	DATE	BY

TOLERANCES UNLESS OTHERWISE NOTED

DECIMAL DIMENSIONS
00.00 ± .010
00.000 ± .003

FRACTIONAL DIMENSIONS
UP TO 18" ± 1/64
18" TO 50" ± 1/32
50" & OVER ± 1/16

BREAK SHARP EDGES .02

ALL SURFACES TO HAVE 125 ✓ FINISH UNLESS OTHERWISE NOTED.

KITT PEAK NATIONAL OBSERVATORY

OPERATED BY THE
ASSOCIATION OF UNIVERSITIES FOR RESEARCH IN ASTRONOMY, INC.
UNDER CONTRACT WITH
NATIONAL SCIENCE FOUNDATION

150 IN. STELLAR TELESCOPE — REF. FILE 1173

NAME: RING GIRDER PLUG
PRIMARY MIRROR EDGE SUPPORT

SCALE: FULL

PRINT ISSUED

DESIGNED BY	DATE 10-9-69	APPROVED BY	DATE 10-23-69	DRAWING NUMBER 2150.262-C012
DRAWN BY	DATE 10-9-69	APPROVED BY	DATE 11/24/69	
CHECKED BY	DATE 11-17-69	APPROVED BY	DATE 10-16-69	

REV.

4/69 DIETERICH-POST CLEARPRINT 1020