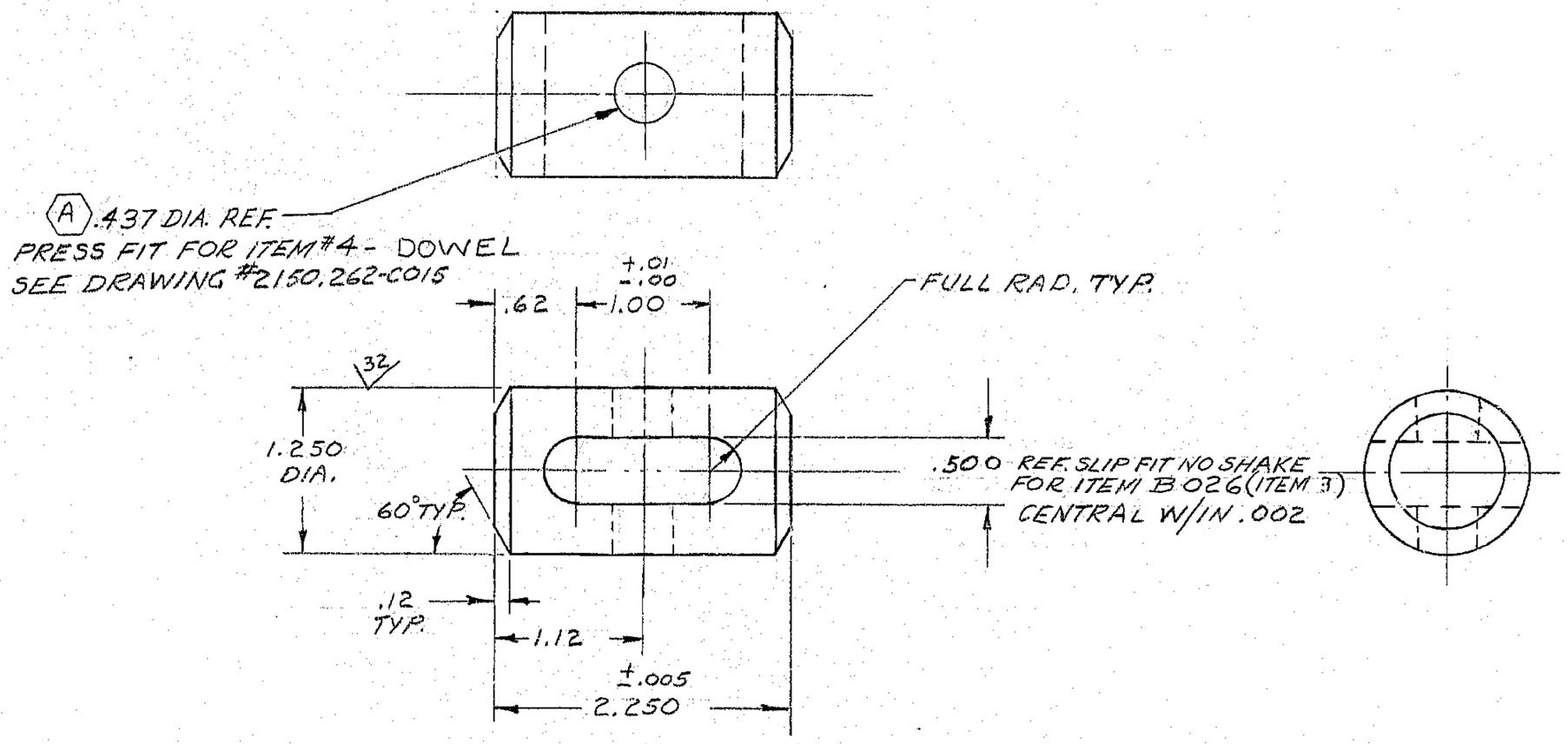

MATERIAL: #416 STAINLESS STEEL

ITEM #2

FOR ASSEMBLY SEE 2150.262-C015

LET.	REVISION ON	ECR	DATE	BY
A	WAS .375 DIA.	0437	2-13-70	L.B.

TOLERANCES UNLESS OTHERWISE NOTED
DECIMAL DIMENSIONS
00.00 ±.010
00.000 ±.003
FRACTIONAL DIMENSIONS
UP TO 18" ± 1/64
18" TO 50" ± 1/32
50" & OVER ± 1/16
BREAK SHARP EDGES .02
ALL SURFACES TO HAVE 125 FINISH UNLESS OTHERWISE NOTED.

DES'D BY R. J. Harris	DATE 10-9-69	APP'D BY [illegible]	DATE 10-23-69
DRN BY R. J. Harris	DATE 10-9-69	APP'D BY ZKR	DATE 11/24/69
CH'KD BY [illegible]	DATE 11-17-69	APP'D BY [illegible]	DATE 10-15-69

KITT PEAK NATIONAL OBSERVATORY
OPERATED BY THE
ASSOCIATION OF UNIVERSITIES FOR RESEARCH IN ASTRONOMY, INC.
UNDER CONTRACT WITH
NATIONAL SCIENCE FOUNDATION

150 IN. STELLAR TELESCOPE | REF. FILE 1173

NAME BASE SWIVEL
PRIMARY MIRROR EDGE SUPT.

SCALE FULL
PRINT ISSUED

DRAWING NUMBER 2150.262-B023
REV. A

10/68 DIETERICH-POST CLEARPRINT 1020